THE SMART EXTRUSION- AND FASTENING TECHNOLOGY

The key elements of the Modular Automation System are the unique Extrusion and Fastening Technologies. Extrusions, available in 40 mm and 50 mm size systems, are fully compatible due to a common 14 mm slot size.

In combination with a strong Fastening Technology, the system is unique in its stability and rigidity as well as in its enormous potential for time savings - from design to assembly.

One slot size fits all
- 13 profile shapes in 40 mm and 50 mm extrusion sizes simplify the application
- large, uniform 14 mm wide and 14mm deep T-slot
- same T-slot dimensions for all extrusions in the Modular Automation System
- post insertion of heavy duty Drop-in Nuts up to M8 possible

Maximum stability
- worldwide unique play-free, accurate and centrally aligned connections
- single fastener provides up to 4 tons of tensile strength
- tubular honeycomb structure for outstanding torsion and load resistance
- maximum stability for all your applications

One fastener, double value
- two-sided fastener provides equal strength on both sides of the connection
- twice the strength for the price of one
- no additional connectors needed
- strength comparable to a welded connection

Any hole drilled is one hole too many
- all connections made without drilling or milling
- maximum wall thickness in key areas
- unlimited re-usability
- for required hole an integrated location groove guarantees precise and straight drilling

Stability increases with every turn
- every turn positions centering inserts tighter into the T-slot
- absolutely play-free, accurate and centrally aligned connection
- concave surface of extrusion guarantees durable vibration resistance
- low fastener height saves space in your design

Inserting the drop-in nut
- simple and quick insertion of the drop-in nut into the 14 mm wide T-slot
- leaf spring assembly protects drop-in nut against unintended movement, guaranteed contact surface
- to position the the drop-in nut, just slide to stop position

Anything is possible - even post assembly
- simple post-assembly integration of struts without dismantling the frame
- easy repositioning of struts at any time
- no cutting of existing structures
- no surface treatment required

Save time, cut cost
- minimal assembly time required
- simple and quick selection of Extrusion and Fastening Technology
- no measuring of boreholes and no drawings necessary
- length of the extrusion is the only measurement needed
- labeled and tapped extrusions allow immediate assembly

The Smart Extrusion Technology

Extrusion, 40 mm Series

Page 66

Extrusion 16x40
PIL1640

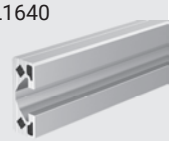

P. 66

Extrusion 40x40
PIL4040

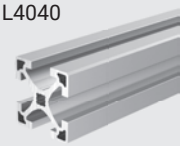

P. 66

Extrusion 40x80
PIL4080

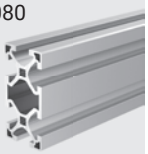

P. 67

Extrusion 80x80
PIL8080

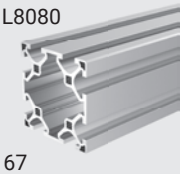

P. 67

Lean Line Extrusion
40x40
PIL4140

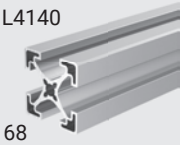

P. 68

Lean Line Extrusion
40x80
PIL4180

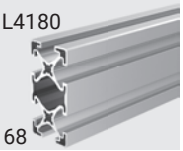

P. 68

Extrusion 40x120
PIL4012

P. 69

Extrusion, 50 mm Series

Page 70

Extrusion 50x50
PIL5050

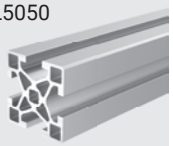

P. 70

Extrusion 50x100
PIL5010

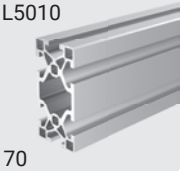

P. 70

Extrusion 50x200
PIL5020

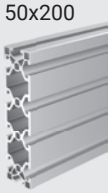

P. 71

Extrusion 100x100
PIL1010

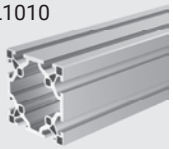

P. 72

Extrusion 100x200
PIL1020

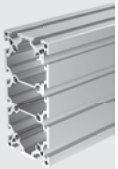

P. 72

Extrusion 25x200
PIL2520

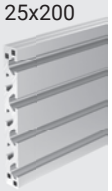

P. 73

The Strong Fastening Technology

Fastening Technology 40 mm Series

Page 74

Fastener 16x40
FAS1641

P. 74

Fastener 40x40
FAS404_

P. 74

Fastener 40x80
FAS408_

P. 75

Surface Fastener
40x40
FAS4049

P. 76

End-to-End Fastener
40x40
FAS4051
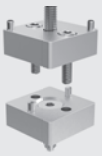
P. 76

Angle Fastener 45°
GUS4541

P. 77

Elbow Joint
GUS4_41

P. 77

Fastening Technology 50 mm Series

Page 78

Fastener 50x50
FAS505_

P. 78

Surface Fastener
50x50
FAS505_

P. 80

End-to-End
Fastener 50x50
FAS5061

P. 81

Fastener 100x200
FAS102_
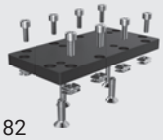
P. 82

Fastening Technology 40 mm and 50 mm Series

Page 83

Bracket 40
GUS450_

P. 83

Fixing Bracket 35x25
GUS4651
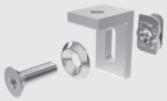
P. 84

Bracket 100
GUS100_

P. 85

Corner Bracket 100,
one side centered
GUS110_

P. 85

Drop-In Nut
TIN45__
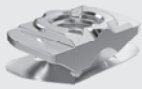
P. 86

Inserter
TIN9990
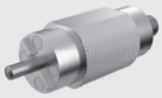
P. 87

T-Nut
TIN60__
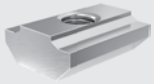
P. 87

T-Nut Bar
TIN_000
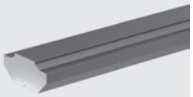
P. 88

T-Nut In-Line
Fastener
TIN0171

P. 88

Miter Fastener
TIN4545

P. 89

Special Fastener
TIN_000

P. 89

PIL1640 Extrusion 16x40

Application
- Signs, shelves, racks
- Hand rails, guide rails
- MRO equipment
- etc.

Technical Data
Material: EN AW-6063-T66 clear anodized aluminum

Section modulus	W_x:	2.9 cm^3
Section modulus	W_y:	1.0 cm^3
Geometrical moment of inertia:		
against x	I_x:	5.8 cm^4
against y	I_y:	0.8 cm^4
against torsion	I_t:	0.6 cm^4
Cross sectional area	A:	323.6 mm^2

Extrusion, stock length: 6050 mm
(usable length 6000 mm)

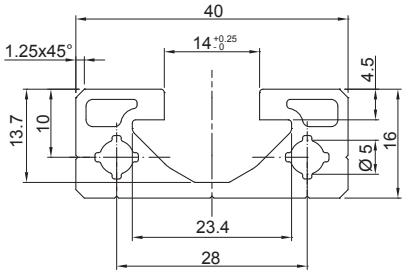

Tolerances and Deflection
see pages 198 to 199

Order Code

Description	Order Code[1]	Weight/Meter
Extrusion 16x40, cut to length, M6x15 thread on both ends	PIL1640SNN	0.890 kg
Extrusion 16x40, stock length 6050 mm	PIL1640NNN	0.890 kg

PIL4040 Extrusion 40x40

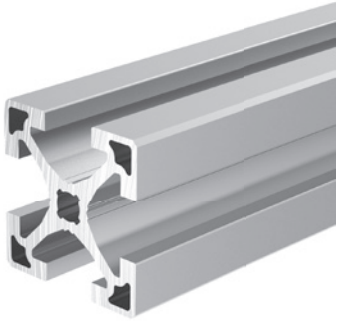

Application
- Machine guardings
- Enclosures
- Safety fence panels & doors
- Light weight machine frames
- Shelves, racks, trolleys (MRO equipment)
- etc.

Technical Data
Material: EN AW-6063-T66 clear anodized aluminum

Section modulus	$W_x = W_y$:	4.3 cm^3
Geometrical moment of inertia:		
against x + y	$I_x = I_y$:	8.6 cm^4
against torsion	I_t:	0.7 cm^4
Cross sectional area	A:	554.6 mm^2

Extrusion, stock length: 6050 mm
(usable length 6000 mm)

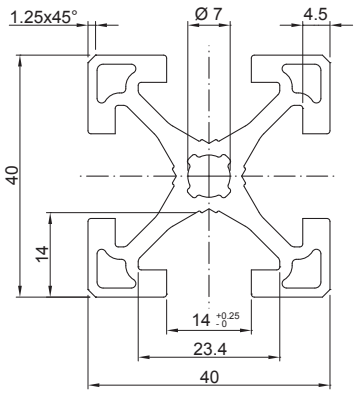

Tolerances and Deflection
see pages 198 to 199

Order Code

Description	Order Code[1]	Weight/Meter
Extrusion 40x40, cut to length, M8x50 thread on both ends	PIL4040SNN	1.530 kg
Extrusion 40x40, stock length 6050 mm	PIL4040NNN	1.530 kg
Extrusion 40x40, 80 pcs., stock length 6050 mm	PIL4040PAC	1.530 kg

1) Please complete the order by adding the length parameters for cut to length orders.
Drawing dimensions in mm

PIL4080 Extrusion 40x80

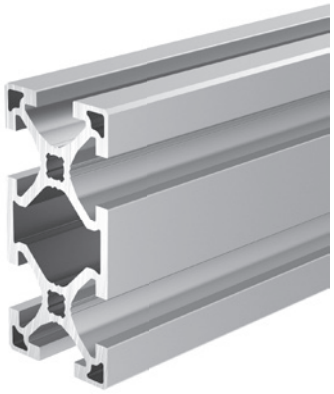

Tolerances and Deflection
see pages 198 to 199

Application
- Machine guardings
- Enclosures
- Safety fence panels & doors
- Machine frames
- Workstations
- Shelves, racks, trolleys (MRO equipment)
- etc.

Technical Data
Material: EN AW-6063-T66 clear anodized aluminum

Section modulus	W_x:	15.4 cm^3
Section modulus	W_y:	8.4 cm^3
Geometrical moment of inertia:		
against x	I_x:	61.6 cm^4
against y	I_y:	16.8 cm^4
against torsion	I_t:	9.3 cm^4
Cross sectional area	A:	1013.2 mm^2

Extrusion, stock length: 6050 mm
(usable length 6000 mm)

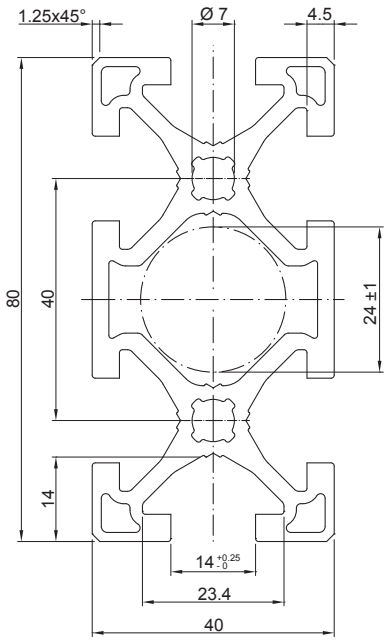

Order Code

Description	Order Code[1]	Weight/Meter
Extrusion 40x80, cut to length, M8x50 thread on both ends	PIL4080SNN	2.780 kg
Extrusion 40x80, stock length 6050 mm	PIL4080NNN	2.780 kg
Extrusion 40x80, 40 pcs., stock length 6050 mm	PIL4080PAC	2.780 kg

PIL8080 Extrusion 80x80

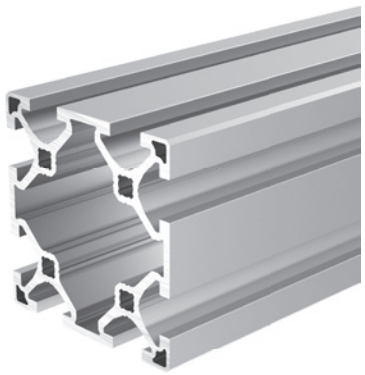

Tolerances and Deflection
see pages 198 to 199

Application
- Machine frames
- Workstations
- Machine guardings
- Enclosures
- Shelves, racks, trolleys (MRO equipment)
- etc.

Technical Data
Material: EN AW-6063-T66 clear anodized aluminum

Section modulus	$W_x = W_y$:	28.0 cm^3
Geometrical moment of inertia:		
against x + y	$I_x = I_y$:	112.0 cm^4
against torsion	I_t:	59.5 cm^4
Cross sectional area	A:	1547.0 mm^2

Extrusion, stock length: 6050 mm
(usable length 6000 mm)

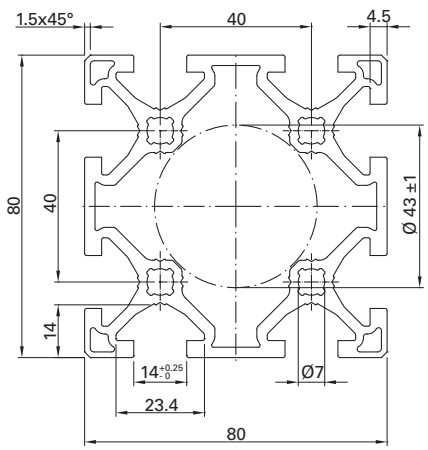

Order Code

Description	Order Code[1]	Weight/Meter
Extrusion 80x80, cut to length, M8x50 thread on both ends	PIL8080SNN	4.280 kg
Extrusion 80x80, stock length 6050 mm	PIL8080NNN	4.280 kg
Extrusion 80x80, 25 pcs., stock length 6050 mm	PIL8080PAC	4.280 kg

1) Please complete the order by adding the length parameters for cut to length orders.
Drawing dimensions in mm

PIL4140 Extrusion 40x40 Lean Line

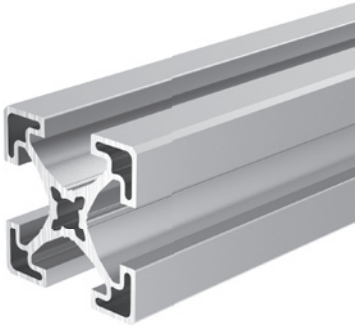

Application
- Machine guardings
- Enclosures
- Safety fence panels
- Light weight machine frames
- Workstations
- Shelves, racks, trolleys (MRO equipment)
- etc.

Technical Data
Material: EN AW-6063-T66 clear anodized aluminum

Section modulus	$W_x = W_y$:	3.3 cm^3
Geometrical moment of inertia:		
against x + y	$I_x = I_y$:	6.5 cm^4
against torsion	I_t:	0.6 cm^4
Cross sectional area	A:	431.0 mm^2

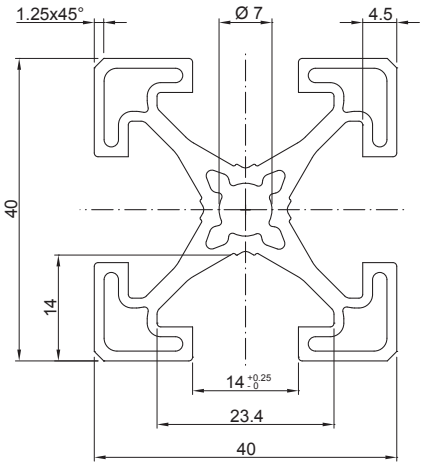

Tolerances and Deflection
see pages 198 to 199

Extrusion, stock length: 6050 mm
(usable length 6000 mm)

Order Code

Description	Order Code[1]	Weight/Meter
Extrusion 40x40 Lean Line, cut to length, M8 thread on both ends	PIL4140SNN	1.160 kg
Extrusion 40x40 Lean Line, stock length 6050 mm	PIL4140NNN	1.160 kg
Extrusion 40x40 Lean Line, 80 pcs., stock length 6050 mm	PIL4140PAC	1.160 kg

PIL4180 Extrusion 40x80 Lean Line

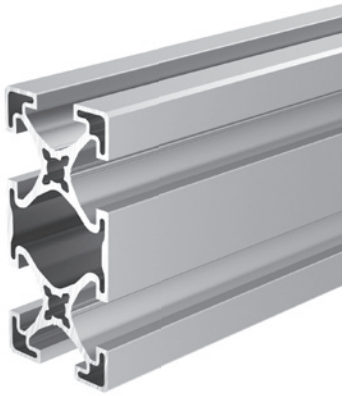

Application
- Machine guardings
- Enclosures
- Safety fence panels
- Light weight machine frames
- Workstations
- Shelves, racks, trolleys (MRO equipment)
- etc.

Technical Data
Material: EN AW-6063-T66 clear anodized aluminum

Section modulus	W_x:	11.9 cm^3
Section modulus	W_y:	6.4 cm^3
Geometrical moment of inertia:		
against x	I_x:	47.4 cm^4
against y	I_y:	12.8 cm^4
against torsion	I_t:	5.9 cm^4
Cross sectional area	A:	790.8 mm^2

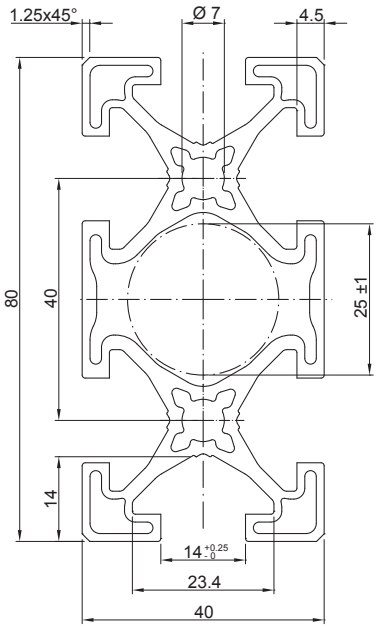

Tolerances and Deflection
see pages 198 to 199

Extrusion, stock length: 6050 mm
(usable length 6000 mm)

Order Code

Description	Order Code[1]	Weight/Meter
Extrusion 40x80 Lean Line, cut to length, M8 thread on both ends	PIL4180SNN	2.140 kg
Extrusion 40x80 Lean Line, stock length 6050 mm	PIL4180NNN	2.140 kg
Extrusion 40x80 Lean Line, 40 pcs., stock length 6050 mm	PIL4180PAC	2.140 kg

1) Please complete the order by adding the length parameters for cut to length orders.
Drawing dimensions in mm

PIL4012 Extrusion 40x120

Application
- Roller conveyor
- Cable ducts
- Manual workstations
- In- and outfeed conveyors

Technical Data

Material: clear anodized aluminum

Section modulus	W_x:	27.6 cm^3
Section modulus	W_y:	6.8 cm^3
Geometrical moment of inertia:		
against x	I_x:	182.2 cm^4
against y	I_y:	19.3 cm^4
against torsion	I_t:	1.2 cm^4
Cross sectional area	A:	1108.8 mm^2

Thread dimension: M6x50, M8x50

Extrusion, stock length: 6050 mm
(usable length 6000 mm)

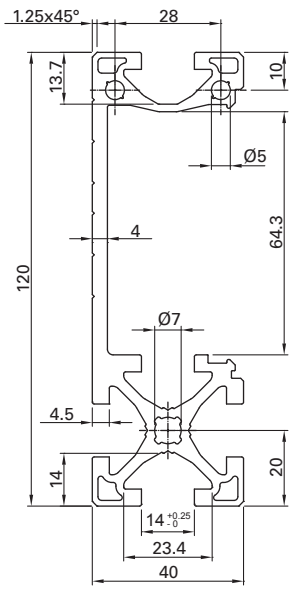

Tolerances and Deflection
see pages 198 to 199

Cover Extrusion For PIL4012
see pages 177

Order Code

Description	Order Code[1]	Weight/Meter
Extrusion 40x120, cut to length, M6 or M8 thread on both ends	PIL4012SNN	3.050 kg
Extrusion 40x120, stock length 6050 mm	PIL4012NNN	3.050 kg
Extrusion 40x120, 24 pcs., stock length 6050 mm	PIL4012PAC	3.050 kg

1) Please complete the order by adding the length parameters for cut to length orders.
Drawing dimensions in mm

PIL5050 Extrusion 50x50

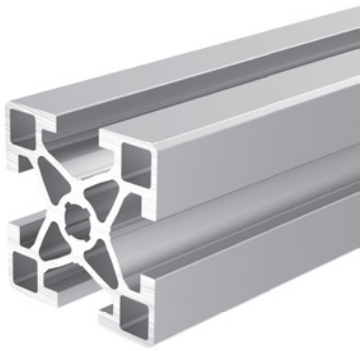

Application
- Machine frames
- Robot frame structures
- Workstations
- Machine guardings
- Enclosures
- Shelves, racks, trolleys (MRO equipment)
- etc.

Technical Data
Material: EN AW-6063-T66 clear anodized aluminum

Section modulus	$W_x = W_y$:	8.0 cm^3
Geometrical moment of inertia:		
against x + y	$I_x = I_y$:	20.0 cm^4
against torsion	I_t:	4.8 cm^4
Cross sectional area	A:	857.5 mm^2

Extrusion, stock length: 6050 mm
(usable length 6000 mm)

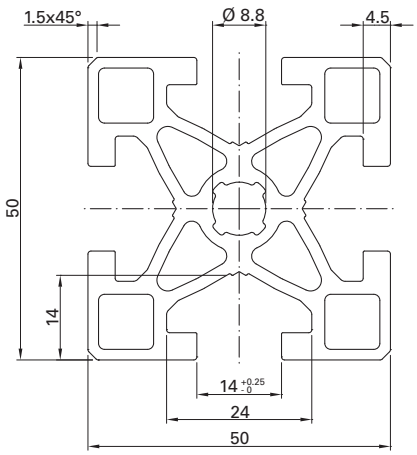

Tolerances and Deflection
see pages 198 to 199

Order Code

Description	Order Code[1]	Weight/Meter
Extrusion 50x50, cut to length, M10x50 thread on both ends	PIL5050SNN	2.350 kg
Extrusion 50x50, stock length 6050 mm	PIL5050NNN	2.350 kg
Extrusion 50x50, 64 pcs., stock length 6050 mm	PIL5050PAC	2.350 kg

PIL5010 Extrusion 50x100

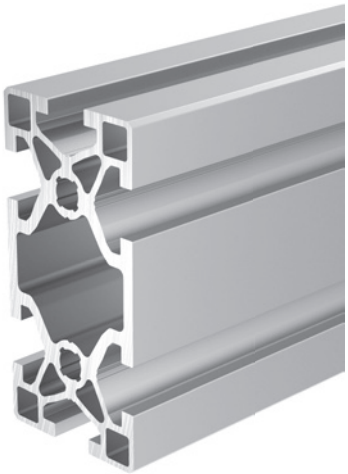

Application
- Machine frames
- Robot frame structures
- Workstations
- Base support for Linear Motion Units & gantries
- Machine guardings
- Enclosures
- Shelves, racks, trolleys (MRO equipment)
- etc.

Technical Data
Material: EN AW-6063-T66 clear anodized aluminum

Section modulus	W_x:	29.7 cm^3
Section modulus	W_y:	16.6 cm^3
Geometrical moment of inertia:		
against x	I_x:	148.5 cm^4
against y	I_y:	41.4 cm^4
against torsion	I_t:	37.0 cm^4
Cross sectional area	A:	1559.3 mm^2

Extrusion, stock length: 6050 mm
(usable length 6000 mm)

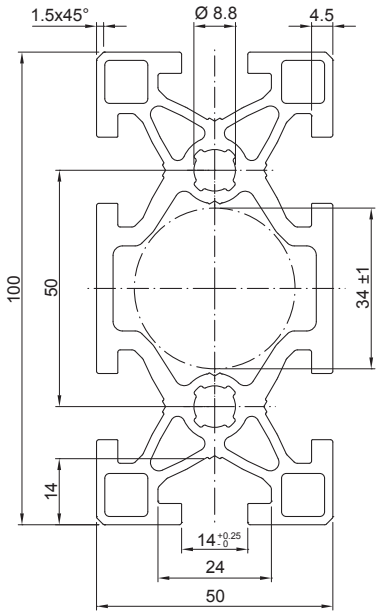

Tolerances and Deflection
see pages 198 to 199

Order Code

Description	Order Code[1]	Weight/Meter
Extrusion 50x100, cut to length, M10x50 thread on both ends	PIL5010SNN	4.290 kg
Extrusion 50x100, stock length 6050 mm	PIL5010NNN	4.290 kg
Extrusion 50x100, 32 pcs., stock length 6050 mm	PIL5010PAC	4.290 kg

1) Please complete the order by adding the length parameters for cut to length orders.
Drawing dimensions in mm

PIL5020 Extrusion 50x200

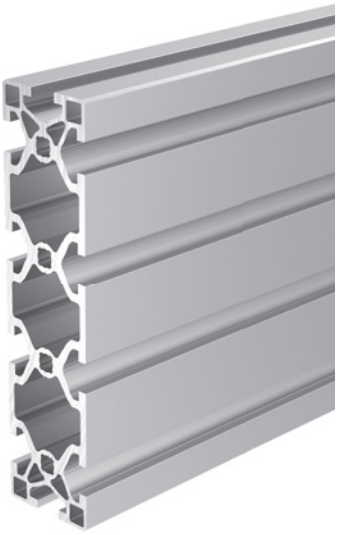

Tolerances and Deflection
see pages 198 to 199

Application
- Heavy duty machine frames
- Robot frame structures
- Workstations
- Base support for Linear Motion Units & gantries
- Machine guardings
- Enclosures
- Shelves, racks, trolleys (MRO equipment)
- etc.

Technical Data

Material: EN AW-6063-T66 clear anodized aluminum

Section modulus	W_x:	107.8 cm^3
Section modulus	W_y:	33.6 cm^3
Geometrical moment of inertia:		
against x	I_x:	1077.8 cm^4
against y	I_y:	84.1 cm^4
against torsion	I_t:	107.0 cm^4
Cross sectional area	A:	2962.8 mm^2

Extrusion, stock length: 6050 mm
(usable length 6000 mm)

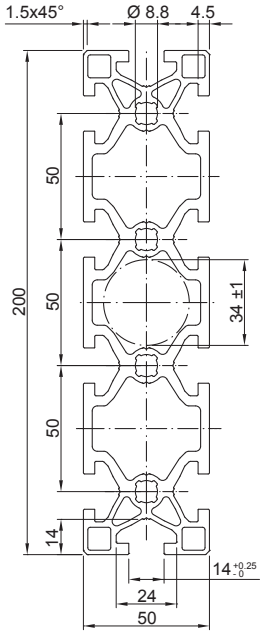

Order Code

Description	Order Code[1]	Weight/Meter
Extrusion 50x200, cut to length, M10x50 thread on both ends	PIL5020SNN	8.150 kg
Extrusion 50x200, stock length 6050 mm	PIL5020NNN	8.150 kg
Extrusion 50x200, 16 pcs., stock length 6050 mm	PIL5020PAC	8.150 kg

1) Please complete the order by adding the length parameters for cut to length orders.
Drawing dimensions in mm

PIL1010 Extrusion 100x100

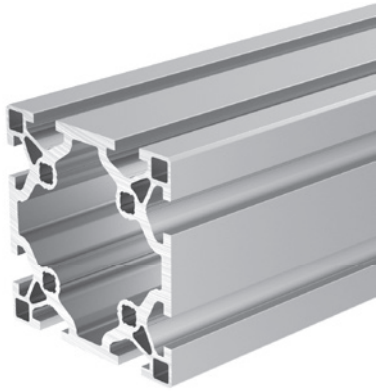

Application
- Heavy duty machine frames
- Robot frame structures
- Workstations
- Base support for Linear Motion Units & gantries
- Machine guardings
- Enclosures
- Shelves, racks, trolleys (MRO equipment)
- etc.

Technical Data
Material: EN AW-6063-T66 clear anodized aluminum

Section modulus	$W_x = W_y$:	61.1 cm³
Geometrical moment of inertia:		
against x + y	$I_x = I_y$:	305.6 cm⁴
against torsion	I_t:	256.0 cm⁴
Cross sectional area	A:	2714.4 mm²

Extrusion, stock length: 6050 mm (usable length 6000 mm)

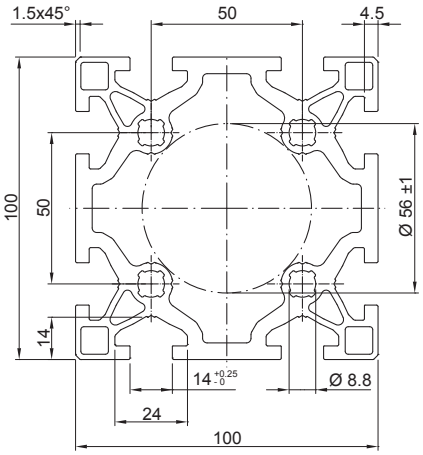

Tolerances and Deflection
see pages 198 to 199

Order Code

Description	Order Code[1]	Weight/Meter
Extrusion 100x100, cut to length, M10x50 thread on both ends	PIL1010SNN	7.480 kg
Extrusion 100x100, stock length 6050 mm	PIL1010NNN	7.480 kg
Extrusion 100x100, 16 pcs., stock length 6050 mm	PIL1010PAC	7.480 kg

PIL1020 Extrusion 100x200

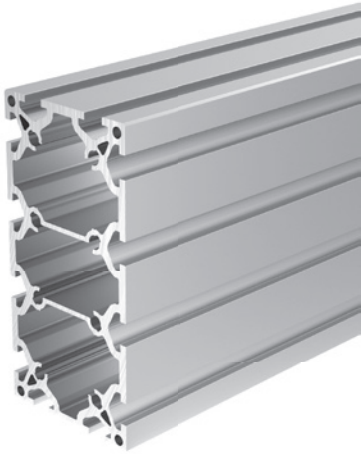

Application
- Heavy duty machine frames
- Robot frame structures
- Workstations
- Base support for Linear Motion Units & gantries
- Machine guardings
- Machine enclosures
- Shelves, racks, trolleys (MRO equipment)
- etc.

Technical Data
Material: EN AW-6063-T66 clear anodized aluminum

Section modulus	W_x:	220.2 cm³
Section modulus	W_y:	132.9 cm³
Geometrical moment of inertia:		
against x	I_x:	2202.2 cm⁴
against y	I_y:	664.4 cm⁴
against torsion	I_t:	794.0 cm⁴
Cross sectional area	A:	5128.7 mm²

Extrusion, stock length: 6050 mm (usable length 6000 mm)

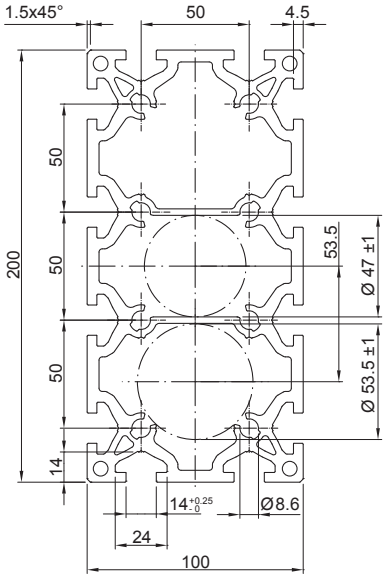

Tolerances and Deflection
see pages 198 to 199

Order Code

Description	Order Code[1]	Weight/Meter
Extrusion 100x200, cut to length, M10x50 thread on both ends	PIL1020SNN	13.700 kg
Extrusion 100x200, stock length 6050 mm	PIL1020NNN	13.700 kg
Extrusion 100x200, 8 pcs., stock length 6050 mm	PIL1020PAC	13.700 kg

PIL2520 Extrusion 25x200

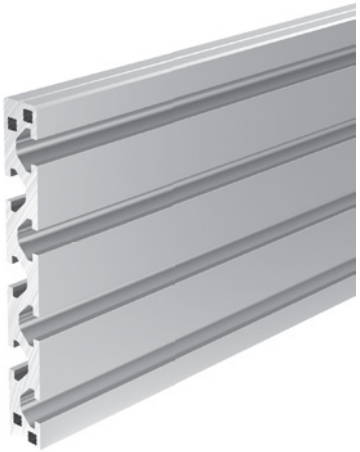

Tolerances and Deflection
see pages 198 to 199

Application
- Carriage plates for Linear Motion Units
- Workstations
- Shelves, racks, trolleys (MRO equipment)
- etc.

Technical Data
Material: EN AW-6063-T66 clear anodized aluminum

Section modulus	W_x:	102.8 cm^3
Section modulus	W_y:	14.1 cm^3
Geometrical moment of inertia:		
against x	I_x:	1027.9 cm^4
against y	I_y:	17.6 cm^4
against torsion	I_t:	9.8 cm^4
Cross sectional area	A:	2891.7 mm^2

Extrusion, stock length: 6050 mm
(usable length 6000 mm)

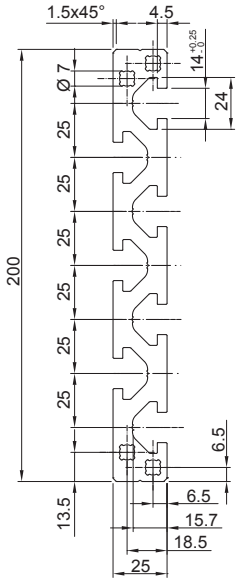

Order Code

Description	Order Code[1]	Weight/Meter
Extrusion 25x200, cut to length, M8x15 thread on both ends	PIL2520SNN	7.900 kg
Extrusion 25x200, stock length 6050 mm	PIL2520NNN	7.900 kg

1) Please complete the order by adding the length parameters for cut to length orders.
Drawing dimensions in mm

FAS1641 Fastener 16x40

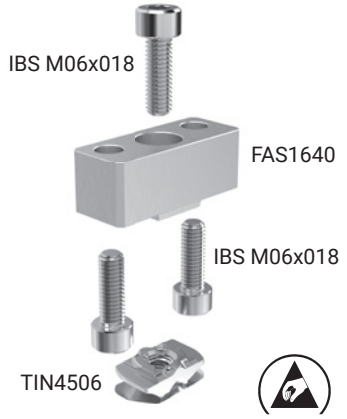

Application
90° fastener for extrusion PIL1640

Technical Data
Material: clear anodized aluminum, galvanized steel

Tightening torque
IBS M06x018 = 10 Nm

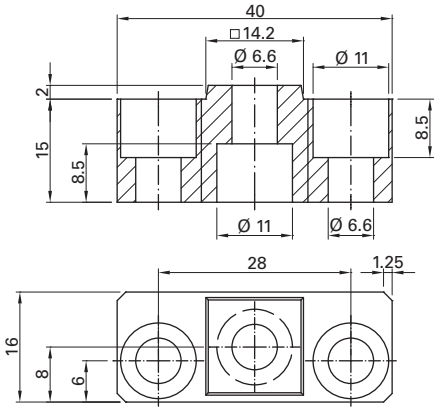

Order Code

Description	Scope of Delivery FAS1640	TIN4506	IBS M06x018	Order Code	Weight
Fastener 16x40 Kit	1	1	3	FAS1641	0.045 kg

FAS404_ Fastener 40x40

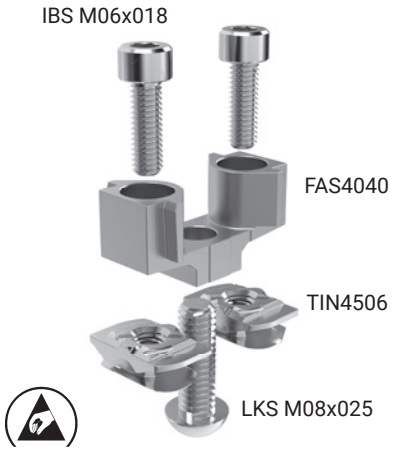

Application
90° fastener on 40 mm series for extrusion PIL 4040 and PIL 4080 transverse

Technical Data
Material: galvanized GD-Zn, galvanized steel

Load index
See page 200

Tightening torque
IBS M06x018 = 10 Nm
LKS M08x025 = 12 Nm

Transfer resistance per conductive connection: < 0,4 Ω

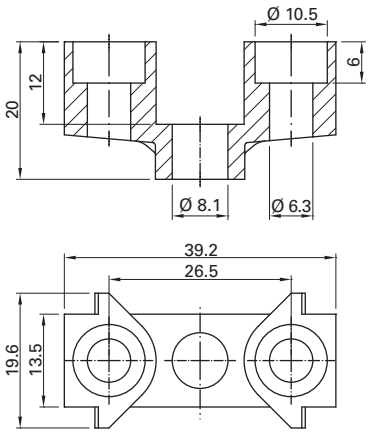

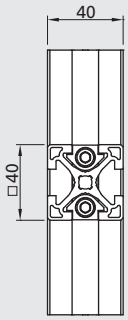

1 unit
FAS4041

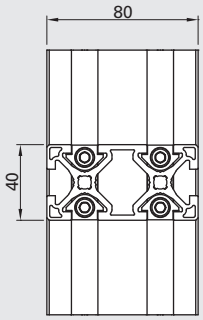

2 units
FAS4041

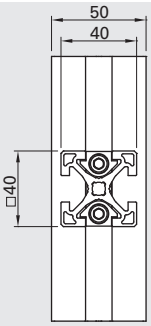

1 unit
FAS4041

Order Code

Description	Scope of Delivery FAS4040	TIN4506	IBS M06x018	LKS M08x025	Order Code	Weight
Fastener 40x40	1	-	-	-	FAS4040	0.029 kg
Fastener 40x40 Kit	1	2	2	1	FAS4041	0.076 kg
Fastener 40x40 Kit, parts packed separately, pack of 100 pcs.	100	200	200	100	FAS4041CPPAC0100	7.500 kg

Drawing dimensions in mm

FAS408_ Fastener 40x80

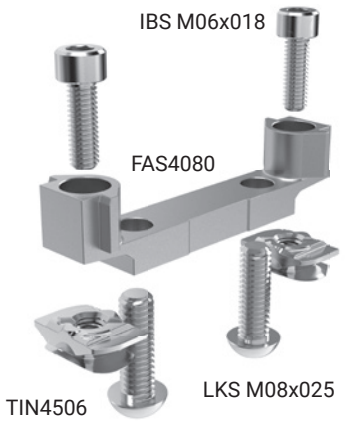

Application
90° fastener on 40 mm series for extrusion
- PIL4080, longitudinal
- PIL8080

Technical Data
Material: galvanized GD-Zn, galvanized steel

Load index
See page 200

Tightening torque
IBS M06x018 = 10 Nm
LKS M08x025 = 12 Nm

Transfer resistance per conductive connection: < 0,4 Ω

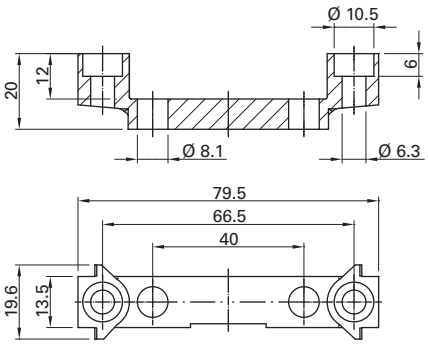

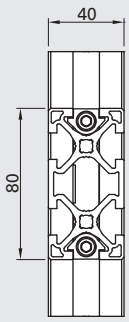

1 unit
FAS4081

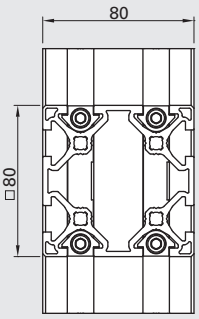

2 units
FAS4081

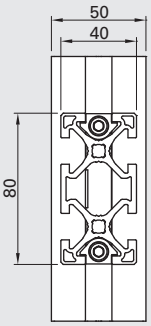

1 unit
FAS4081

Order Code

Description	Scope of Delivery FAS4080	TIN 4506	IBS M06x018	LKS M08x025	Order Code	Weight
Fastener 40x80	1	-	-	-	FAS4080	0.054 kg
Fastener 40x80 Kit	1	2	2	2	FAS4081	0.115 kg
Fastener 40x80 Kit, parts packed separately, pack of 100 pcs.	100	200	200	200	FAS4081CPPAC0100	11.400 kg

Drawing dimensions in mm

FAS4049 Surface Fastener 40x40

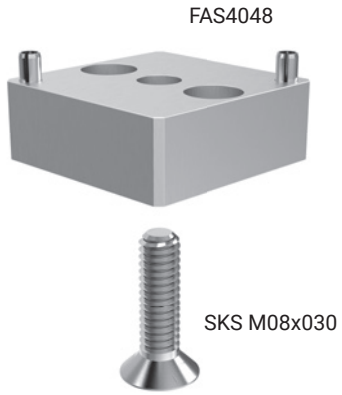

Application
Used for connections to non-Robotunits surfaces on 40 mm series for extrusion PIL4040

Technical Data
Material: clear anodized aluminum, galvanized steel

Tightening torque
SKS M08x030 = 15 Nm

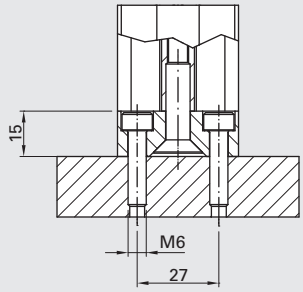

e.g. for attaching to steel plates

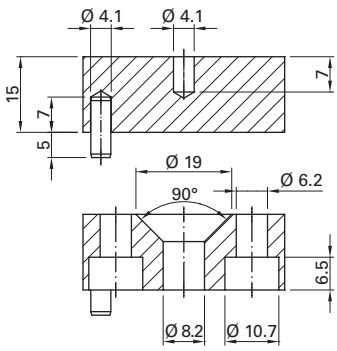

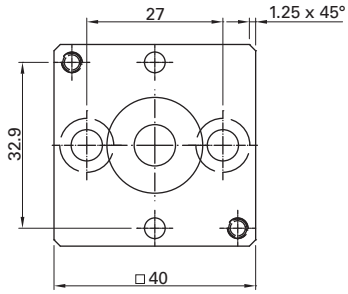

Order Code

Description	Scope of Delivery FAS4048	Scope of Delivery SKS M08x030	Order Code	Weight
Surface Fastener 40x40 Kit	1	1	FAS4049	0.070 kg

FAS4051 End-to-End Fastener 40x40

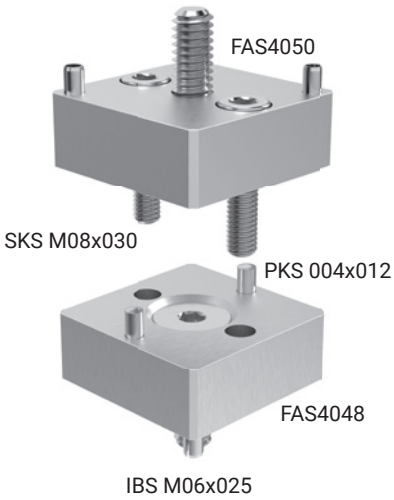

Application
Used for end-to-end connections of 40 mm series for extrusion PIL4040

Technical Data
Material: clear anodized aluminum, galvanized steel

Tightening torque
SKS M08x030 = 15 Nm
IBS M06x025 = 10 Nm

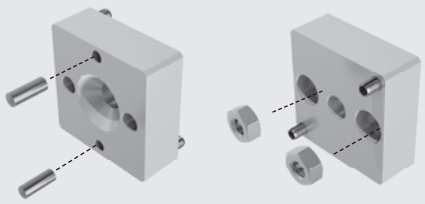

Drive in grooved pin

Press in nut

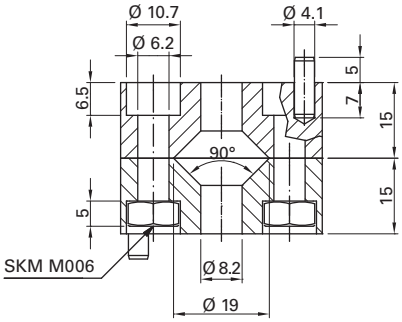

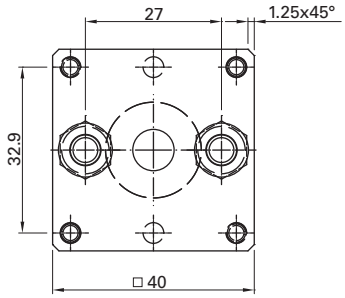

Order Code

Description	Scope of Delivery FAS4048	FAS4050	SKS M08x030	IBS M06x025	PKS 004x012	Order Code	Weight
End-To-End Fastener 40x40 Kit	1	1	2	2	2	FAS4051	0.160 kg

GUS454_ Angle Fastener 45°

Application
For rigid 45° bracing, e.g.:
- Guardings
- Frames

Technical Data
Material: zinc die cast or galvanized steel

Tightening torque
IBS M08X025 = 26 Nm
IBS M08x020NIKO = 20 Nm

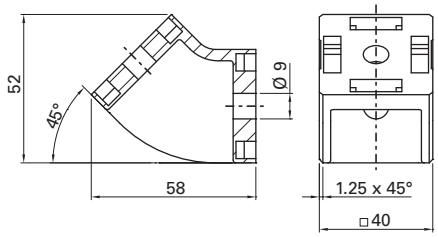

Order Code

Description	Scope of Delivery GUS4540	TIN4508	IBS M08x025	IBS M08x020NIKO	BLS M008	Order Code	Weight
Angle Fastener 45°	1	-	-	-	-	GUS4540	0,224 kg
Angle Fastener 45° Kit	1	1	1	1	2	GUS4541	0,262 kg

GUS4_41 Elbow Joint 40

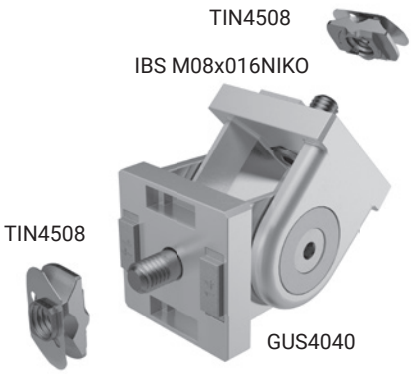

Application
For variable angle connections, e.g.:
- Guardings
- Frames
- Swing arms

Technical Data
Material: zinc diecast or galvanized steel
Pivoting range: +/- 90°

Tightening torque
IBS M08x016NIKO = 20 Nm
Clamp screw = 8 Nm

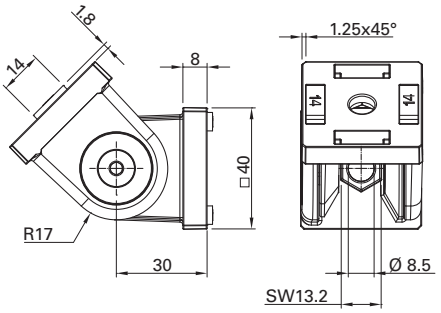

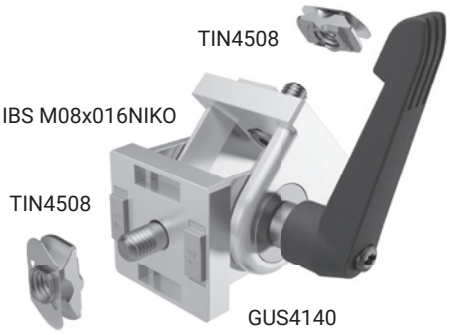

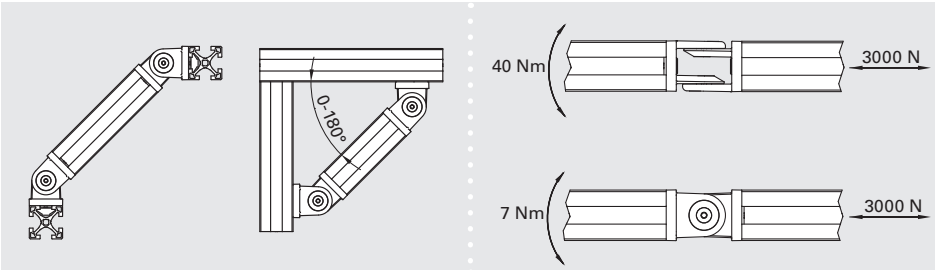

Order Code

Description	Scope of Delivery GUS4040	GUS4140	TIN4508	IBS M08x016NIKO	Order Code	Weight
Elbow Joint 40 with Centering Parts	1	-	-	-	GUS4040	0,132 kg
Elbow Joint 40 with Centering Parts, pack of 10 pcs.	10	-	-	-	GUS4040PAC0010	1,320 kg
Elbow Joint 40 Kit	1	-	2	2	GUS4041	0,179 kg
Elbow Joint 40 Kit with Clamping Lever	-	1	2	2	GUS4141	0,251 kg

Drawing dimensions in mm

FAS505_ Fastener 50x50

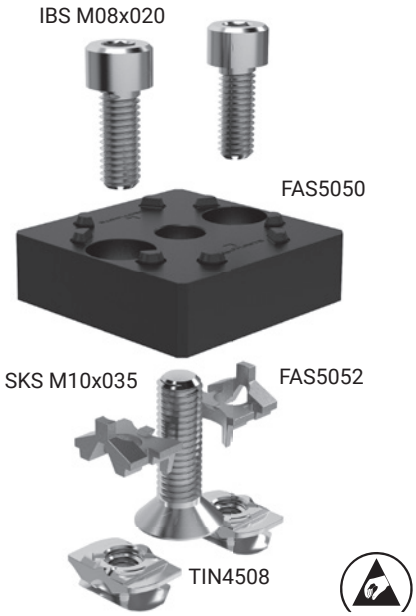

Application
Used for 90° connections of heavy-duty structures in the 50 mm series for extrusions:

- PIL5050
- PIL5010
- PIL5020

Technical Data
Material: GD-Zn black KTL coated, galvanized steel

Load index
See page 200

Tightening torque
IBS M08x020 = 26 Nm
SKS M10x035 = 40 Nm

Transfer resistance per conductive connection: < 0,4 Ω

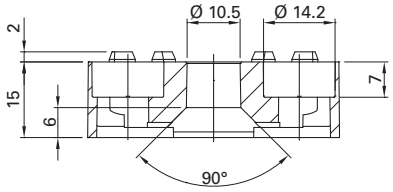

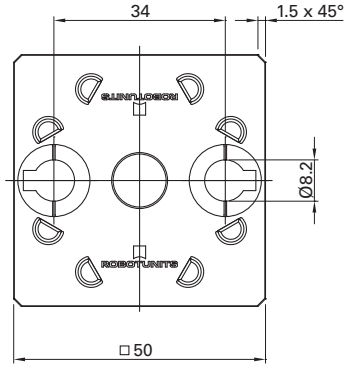

Assembly

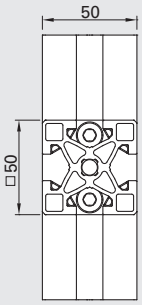

1 units FAS5051

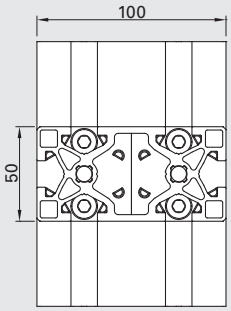

2 units FAS5051

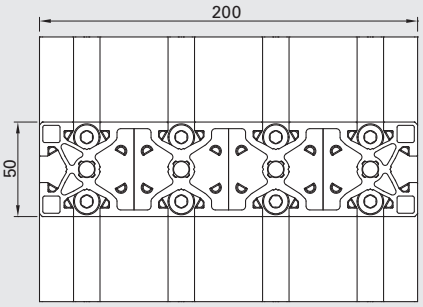

4 units FAS5051

Order Code

Description	Scope of Delivery FAS5050	FAS5052	TIN4508	IBS M08x020	SKS M10x035	Order Code	Weight
Fastener 50x50	1	-	-	-	-	FAS5050	0.144 kg
Fastener 50x50, pack of 100 pcs.	100	-	-	-	-	FAS5050PAC	14.400 kg
Fastener 50x50 Kit	1	2	2	2	1	FAS5051	0.219 kg
Fastener 50x50 Kit, parts packed separately, pack of 100 pcs.	100	200	200	200	100	FAS5051CPPAC0100	21.800 kg
Centering Insert for Fastener 50x50	-	1	-	-	-	FAS5052	0.004 kg

Drawing dimensions in mm

FAS505_ Fastener 50x50 Single-Sided

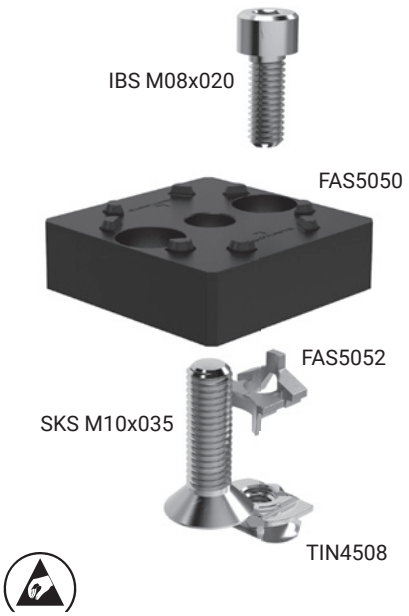

Application
Used for 90° connections of heavy-duty structures in the 50 mm series for extrusions:

- PIL5010
- PIL1010
- PIL5020

Technical Data
Material: GD-Zn black KTL coated, galvanized steel

Load index
See page 200

Tightening torque
IBS M08x020 = 26 Nm
SKS M10x035 = 40 Nm

Transfer resistance per conductive connection: < 0,4 Ω

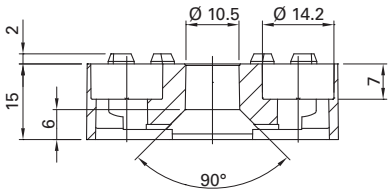

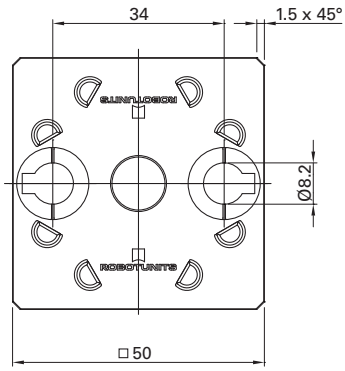

Assembly

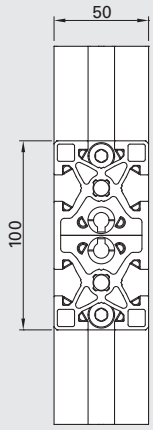

2 units FAS5055 single-sided

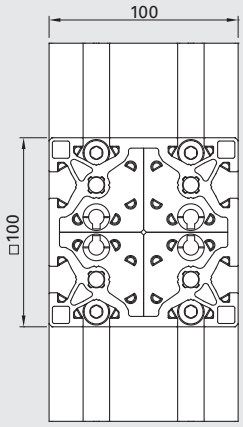

4 units FAS5055 single-sided

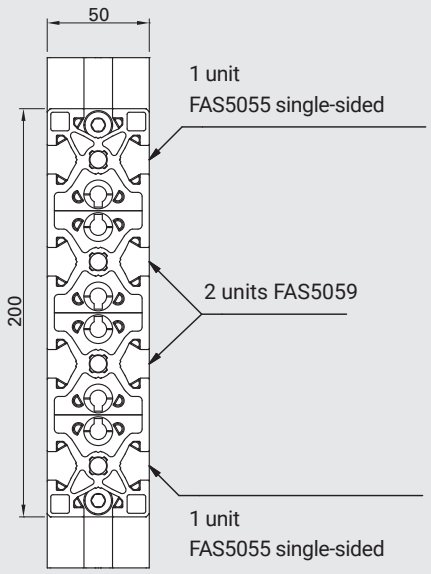

Order Code

Description	Scope of Delivery FAS5050	FAS5052	TIN4508	IBS M08x020	SKS M10x035	Order Code	Weight
Fastener 50x50 Kit, single-sided	1	1	1	1	1	FAS5055	0.193 kg
Fastener 50x50 Kit, single-sided, parts packed separately, pack of 100 pcs.	100	100	100	100	100	FAS5055CPPAC0100	19.300 kg

Drawing dimensions in mm

FAS5059 Surface Fastener 50x50

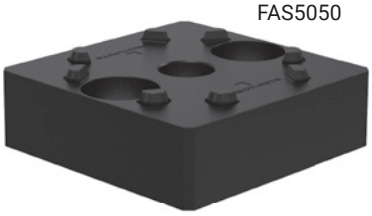

FAS5050

SKS M10x035

Application
Used for connections to non-Robotunits surfaces. 90° connection for massive structures in the 50 mm series for extrusions

- PIL5050
- PIL5010
- PIL1010
- PIL5020

Technical Data
Material: GD-Zn black KTL coated, galvanized steel

Tightening torque
SKS M10x035 = 40 Nm

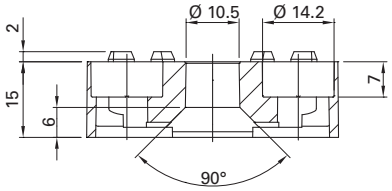

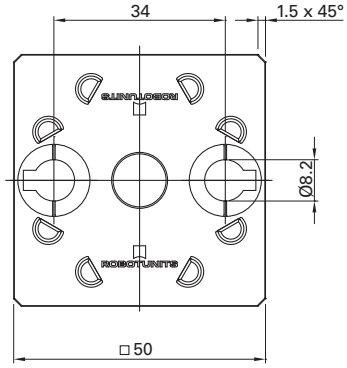

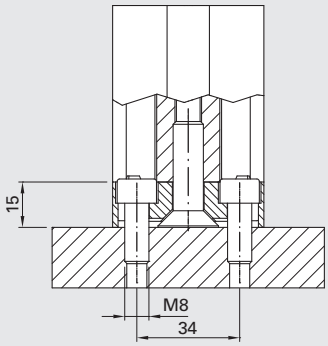

e.g. for attaching to steel plates

Order Code

	Scope of Delivery		Order Code	
Description	FAS5050	SKS M10x035		Weight
Surface Fastener 50x50 Kit	1	1	FAS5059	0.168 kg

Drawing dimensions in mm

FAS5061 End-To-End Fastener 50x50

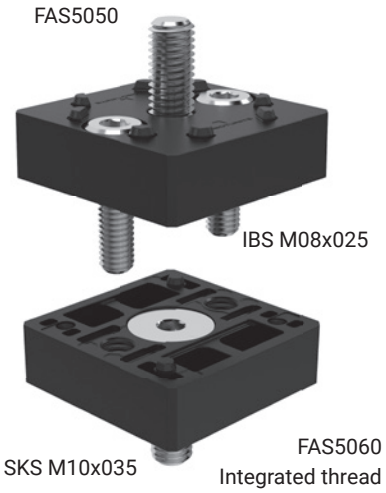

Application
Used for end-to-end connections of 50 mm series extrusions for

- PIL5050
- PIL5010
- PIL1010
- PIL5020

Technical Data
Material: GD-Zn black KTL coated, galvanized steel

Tightening torque
IBS M08x020 = 26 Nm
SKS M10x035 = 40 Nm

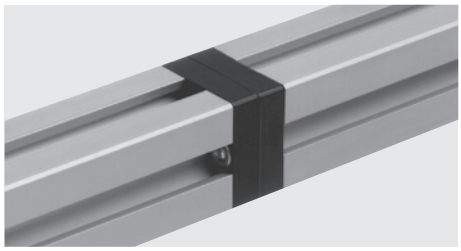

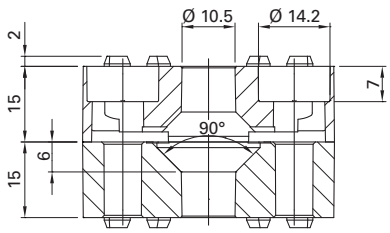

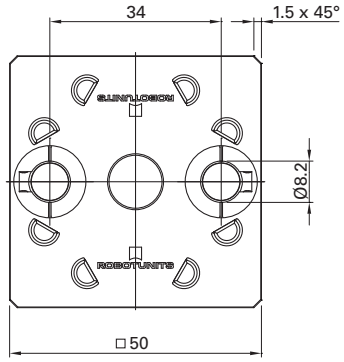

Order Code

	Scope of Delivery				Order Code	
Description	FAS5050	FAS5060	IBS M08x025	SKS M10x035		Weight
End-To-End Fastener 50x50 Kit	1	1	2	2	FAS5061	0.374 kg

Drawing dimensions in mm

FAS102_ Fastener 100x200

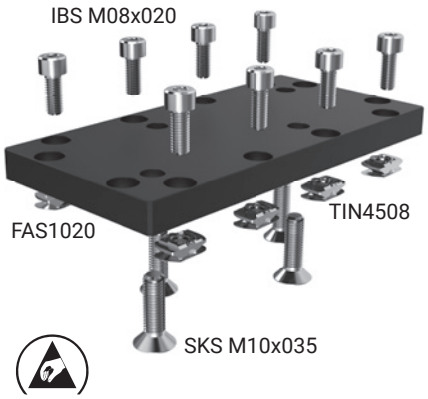

Application
Used for 90° connections of heavy duty structures of PIL1020

Technical Data
Material: black anodized aluminum, galvanized steel

Tightening torque
IBS M08x020 = 26 Nm
SKS M10x035 = 40 Nm

Transfer resistance per conductive connection: < 0,4 Ω

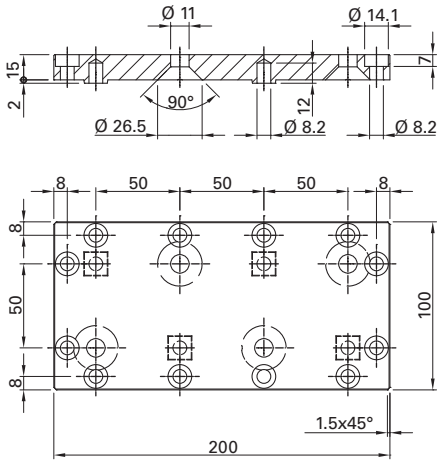

Cross Fastener

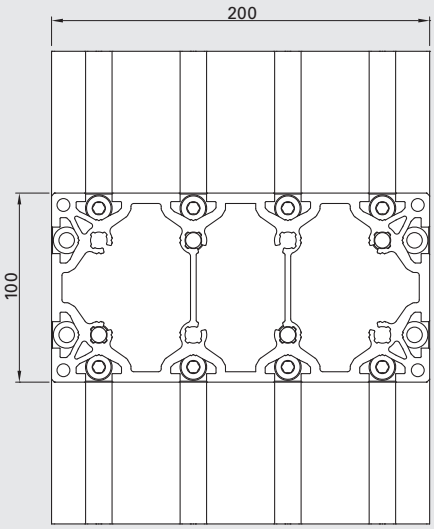

1 units FAS1021

In-Line Fastener

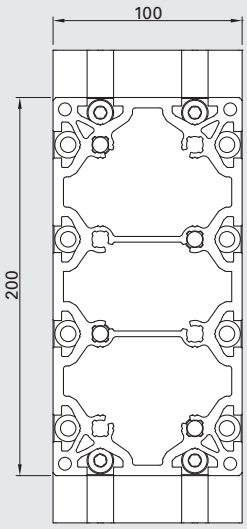

1 units FAS1025

Order Code

	Scope of Delivery				Order Code	
Description	FAS1020	TIN4508	IBS M08x020	SKS M10x035		Weight
Cross Fastener 100x200 Kit	1	8	8	4	FAS1021	1.000 kg
In-Line Fastener 100x200 Kit	1	4	4	4	FAS1025	0.920 kg

Drawing dimensions in mm

GUS450_ Corner Bracket 40/50

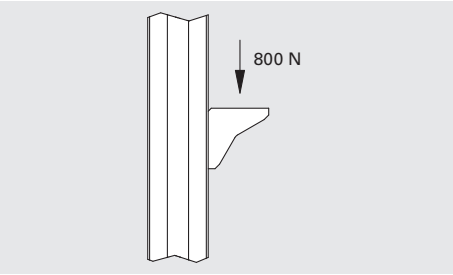

Application
Used for 90° connections and as strengthening element in combination with Robotunits fasteners, for both 40 mm and 50 mm series extrusions, e.g.:

- 40/40 series combination
- 50/50 series combination
- 40/50 series combination

Connections to non-Robotunits extrusions and surfaces, e.g.:

- Mounting of table tops
- Fastening to non-Robotunits extrusions
- Fastening to walls

Technical Data
Material: GD-Zn black KTL coated, galvanized steel

Tightening torque
IBS M08x020NIKO = 20 Nm

By turning the centering insert (GUS4502), the angle bracket can be used in either the 40 mm or the 50 mm series.

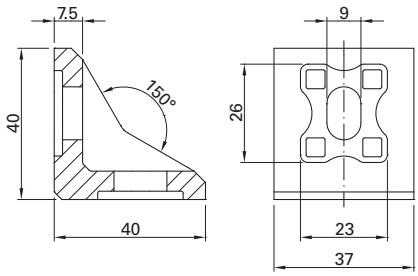

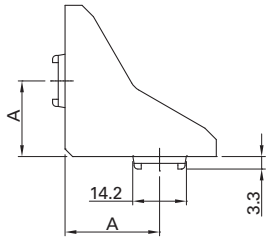

A in 40 mm series = 20
A in 50 mm series = 25

Applications

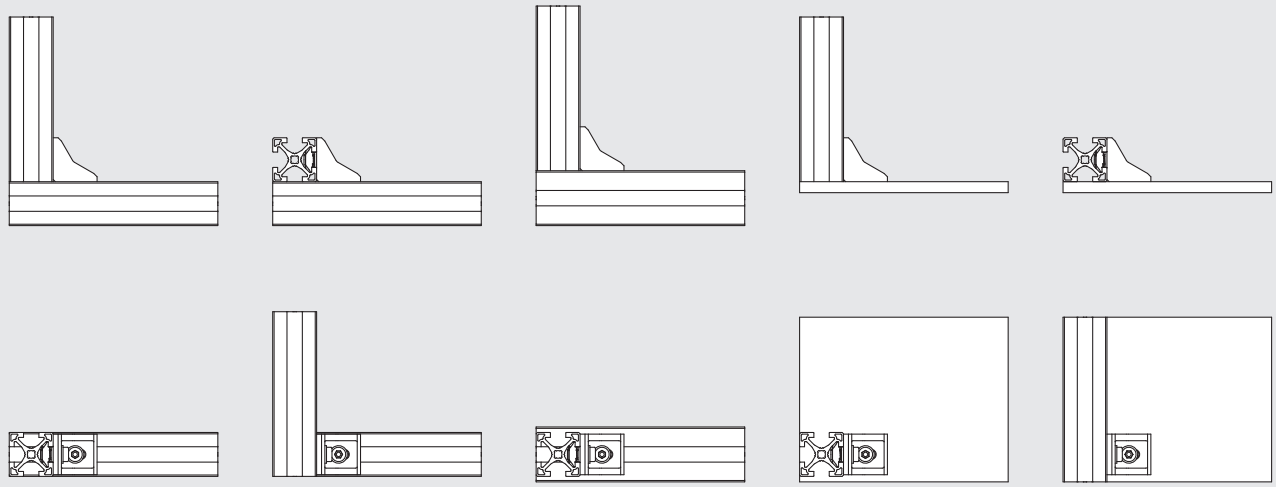

Order Code

Description	Scope of Delivery GUS4500	GUS4502	TIN4508	IBS M08x020NIKO	BLS M008	Order Code	Weight
Corner Bracket 40/50, pack of 50 pcs.	50	-	-	-	-	GUS4500PAC	9.920 kg
Corner Bracket 40/50 Kit	1	2	2	2	2	GUS4501	0.186 kg
Corner Bracket 40/50 Kit, parts packed separately, pack of 100 pcs.	100	200	200	200	200	GUS4501CPPAC0100	18.200 kg
Corner Bracket 40/50 Kit, parts packed separately, pack of 1000 pcs.	1000	2000	2000	2000	2000	GUS4501CPPAC1000	182.000 kg
Centering Insert for Corner Bracket 40/50, pack of 100 pcs.	-	100	-	-	-	GUS4502PAC	1.280 kg

Drawing dimensions in mm

GUS4651 Fixing Bracket 35x25

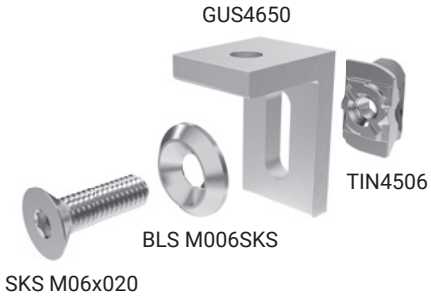

Application
Used for 90° connections and as strengthening element in combination with Robotunits extrusion technology with non-Robotunits components. Particularly suitable for fixing table plates and similar surface elements

Technical Data
Material: clear anodized aluminum galvanized steel

Tightening torque
SKS M06x020 = 9 Nm

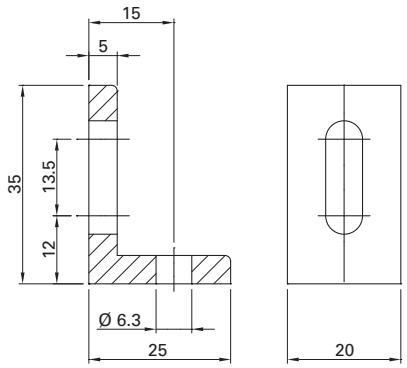

Applications

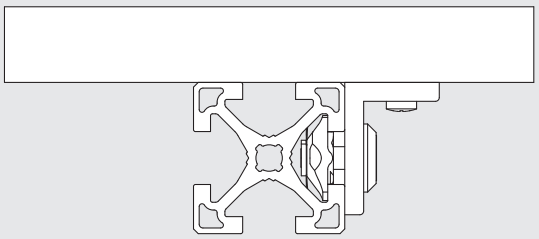

Table plate fastening

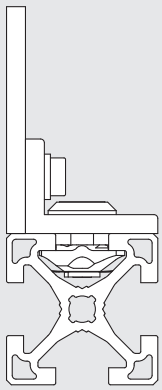

Surface element fastening

Order Code

	Scope of Delivery				Order Code	
Description	GUS4650	TIN4506	SKS M06x020	BLS M006SKS		Weight
Fixing Bracket 35x25 Kit	1	1	1	1	GUS4651	0.030 kg

Drawing dimensions in mm

GUS100_ Corner Bracket 100

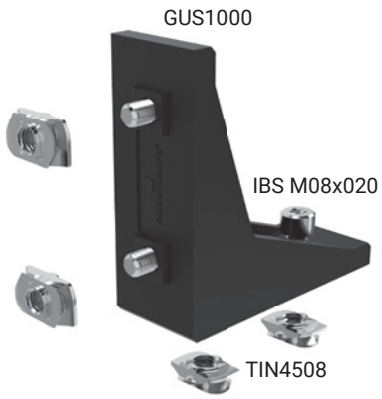

Application
Used for 90° connections and as strengthening element in combination with Robotunits fasteners. The GUS 1000 can also be used with 40 mm series extrusions parallel to T-slot centerline.

Technical Data
Material: GD-Zn black KTL coated, galvanized steel

Tightening torque
IBS M08x020 = 26 Nm

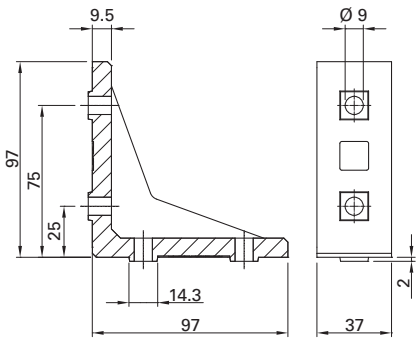

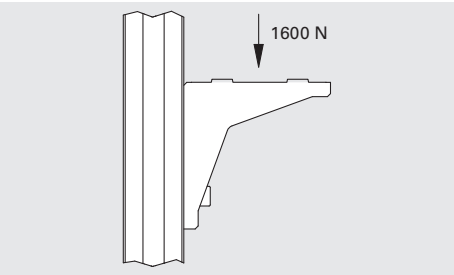

Order Code

Description	Scope of Delivery GUS1000	TIN4508	IBS M08x020	Order Code	Weight
Corner Bracket 100 Kit	1	4	4	GUS1001	0.615 kg
Corner Bracket 100 Kit, parts packed separately, pack of 100 pcs.	100	400	400	GUS1001CPPAC0100	60.600 kg
Corner Bracket 100, pack of 16 pcs.	16	-	-	GUS1000PAC	8.288 kg

GUS110_ Corner Bracket 100, one side centered

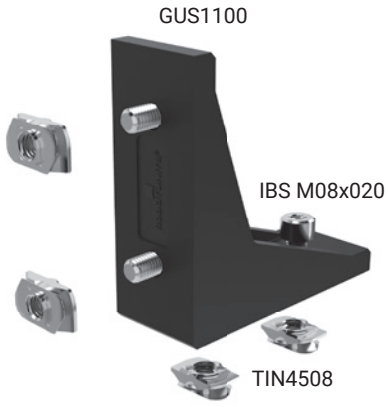

Application
Used for 90° connections and as strengthening element in combination with Robotunits fasteners and non-Robotunits extrusions and surfaces. The GUS 1100 can also be used with 40 mm series extrusions parallel to T-slot centerline.

Technical Data
Material: GD-Zn black KTL coated, galvanized steel

Tightening torque
IBS M08x020 = 26 Nm

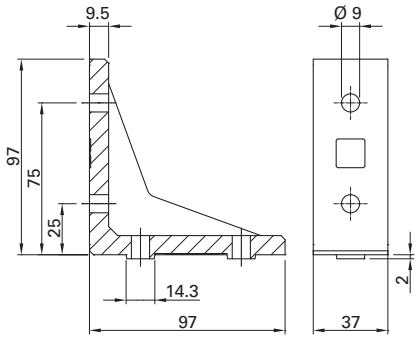

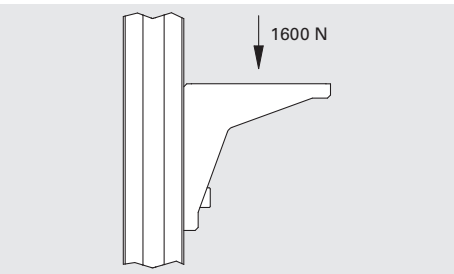

Order Code

Description	Scope of Delivery GUS1100	TIN4508	IBS M08x020	Order Code	Weight
Corner Bracket 100 Kit, one side centered	1	4	4	GUS1101	0.615 kg
Corner Bracket 100 Kit, one side centered, parts packed separately, pack of 100 pcs.	100	400	400	GUS1101CPPAC0100	60.200 kg
Corner Bracket 100 one side centered, pack of 16 pcs.	16	-	-	GUS1100PAC	8.224 kg

TIN45__ Drop-in Nut

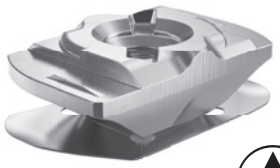

Application
Used for 40 mm and 50 mm series extrusions

- Conductive
- Self-centering
- Slip protection (leaf springs)
- Anti-twist safeguard

Technical Data
Material: galvanized steel

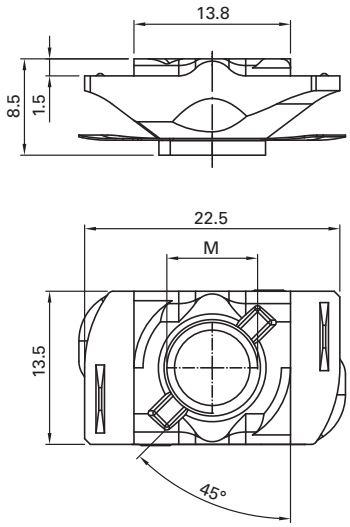

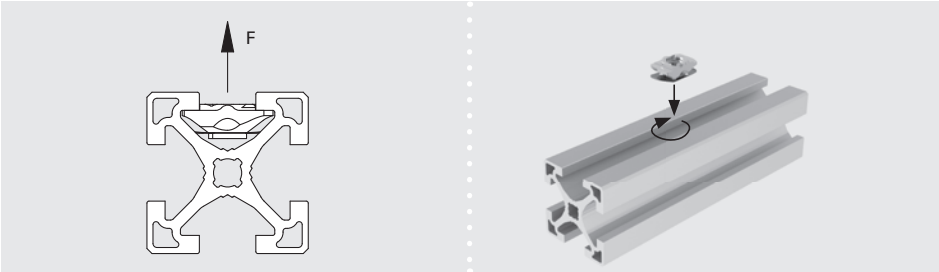

Order Code

Description	F[1]	Order Code	Weight
Drop-in Nut M4	1500 N	TIN4504	0.010 kg
Drop-in Nut M4, pack of 100 pcs.	1500 N	TIN4504PAC0100	1.000 kg
Drop-in Nut M4, pack of 1000 pcs.	1500 N	TIN4504PAC1000	10.000 kg
Drop-in Nut M5	3000 N	TIN4505	0.010 kg
Drop-in Nut M5, pack of 100 pcs.	3000 N	TIN4505PAC0100	1.000 kg
Drop-in Nut M5, pack of 1000 pcs.	3000 N	TIN4505PAC1000	10.000 kg
Drop-in Nut M6	4500 N	TIN4506	0.010 kg
Drop-in Nut M6, pack of 100 pcs.	4500 N	TIN4506PAC0100	1.000 kg
Drop-in Nut M6, pack of 1000 pcs.	4500 N	TIN4506PAC1000	10.000 kg
Drop-in Nut M8	6000 N	TIN4508	0.010 kg
Drop-in Nut M8, pack of 100 pcs.	6000 N	TIN4508PAC0100	1.000 kg
Drop-in Nut M8, pack of 1000 pcs.	6000 N	TIN4508PAC1000	10.000 kg

1) Pull-out values are based on screw quality 8.8
Drawing dimensions in mm

TIN9990 Inserter

New, with built-in magnet

Application
Assembly tool for inserting Drop-in Nuts into T-slot.

Technical Data
Material: galvanized steel

Assembly

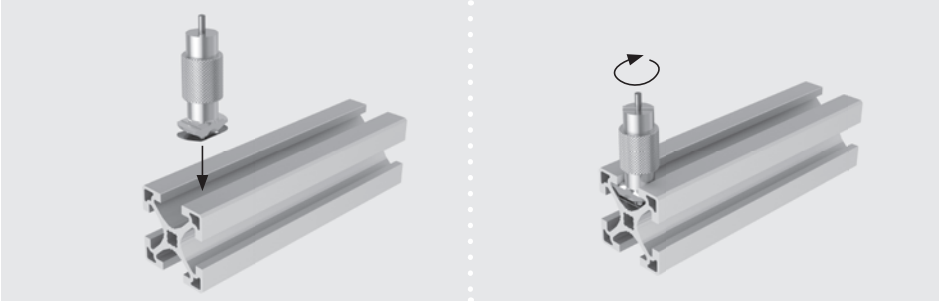

Order Code

Description	Order Code	Weight
Inserter	TIN9990	0.045 kg

TIN60__ T-Nut

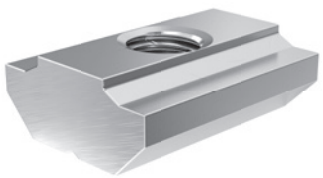

Application
For 40 mm series and 50 mm series extrusions
- Self-centering

Technical Data
Material: galvanized steel

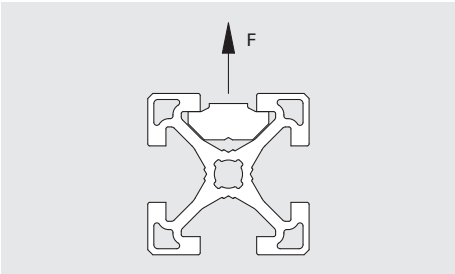

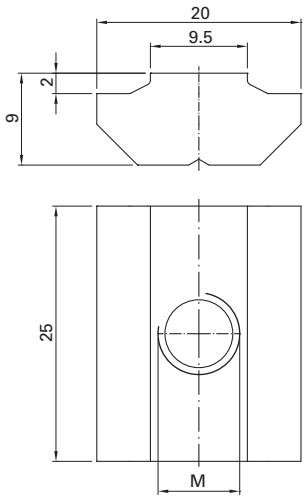

Order Code

Description	F[1]	Order Code	Weight
T-Nut M8	7500 N	TIN6008	0.027 kg
T-Nut M10	7500 N	TIN6010	0.025 kg

1) Pull-out values are based on screw quality 8.8
Drawing dimensions in mm

TIN4590 T-Nut Bar

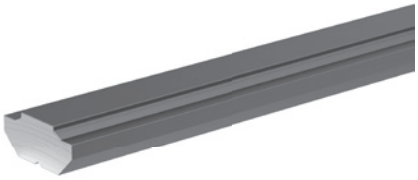

Application
Used for specific applications with
40 mm and 50 mm series extrusions

Technical Data
Material: untreated steel
Stock length: 3030 mm

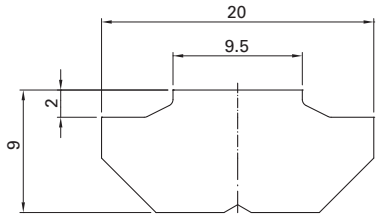

Order Code

Description	Order Code	Weight
T-Nut Bar, cut to length	TIN4590SNN	1.125 kg/m
T-Nut Bar, stock length 3030 mm	TIN4590NNN	3.375 kg

TIN0171 T-Nut In-Line Fastener

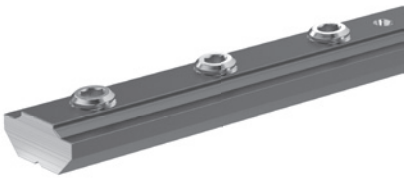

Application
Used for end-to-end connections of
40 mm and 50 mm series extrusions

Technical Data
Material: galvanized steel

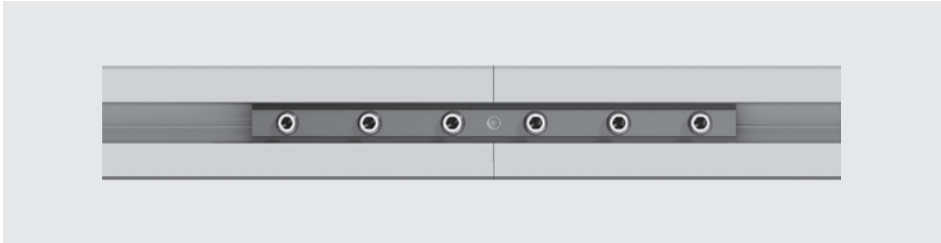

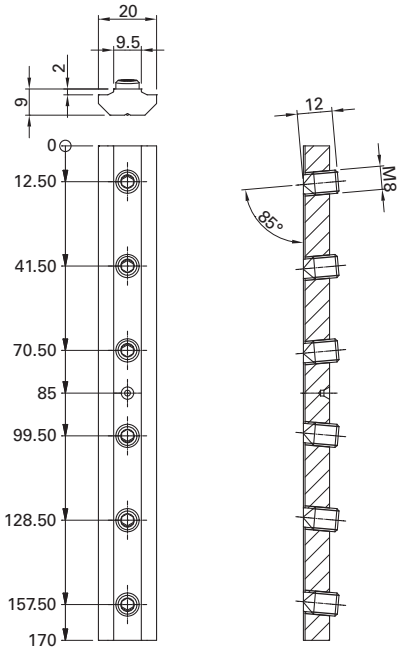

Order Code

Description	Scope of Delivery: Base Part	Scope of Delivery: GST M08x012 SPI	Order Code	Weight
T-Nut In-Line Fastener	1	6	TIN0171	0.196 kg

Drawing dimensions in mm

TIN4545 Miter Fastener

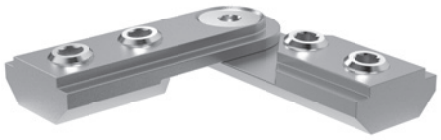

Application
Fasteners for extrusions with miter cuts

Technical Data
Material: galvanized steel

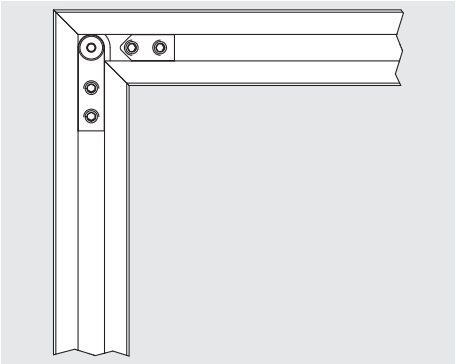

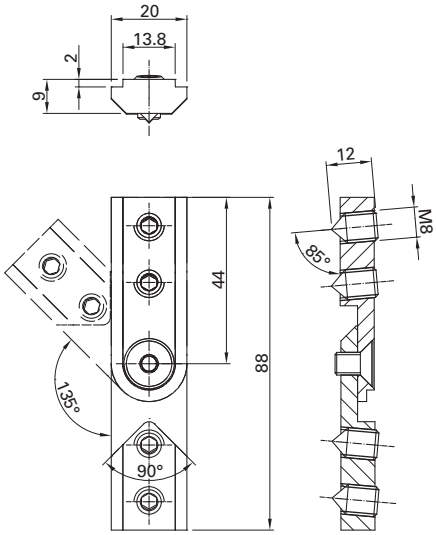

Order Code

Description	Scope of Delivery: Base Part countersunk	Base Part thread	GST M08x012 SPI	SKS M06x010	Order Code	Weight
Miter Fastener	1	1	4	1	TIN4545	0.098 kg

TIN_000 Special Fastener

Application
For mounting parts onto Robotunits extrusions where no holes are to be seen from the outside of the assembly

In contrast with all other Robotunits fasteners, this fastener requires drilling.

Technical Data
Material: galvanized steel, NBR

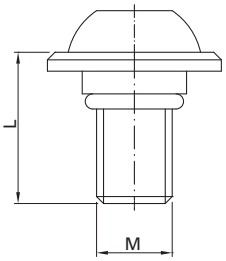

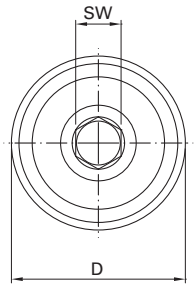

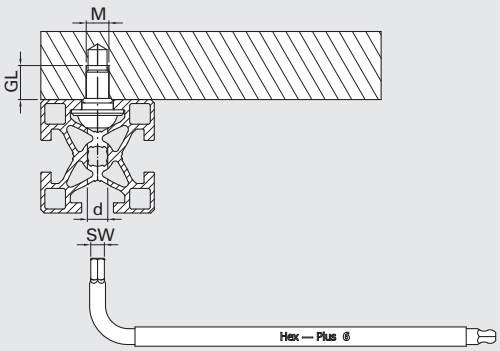

Order Code

Description	GL	SW	M	d	D	L	Order Code	Weight
Special Fastener 40	15	5	M8	7	20	20	TIN4000	0.016 kg
Special Fastener 50	15	6	M10	9	23	20	TIN5000	0.032 kg