MULTIFUNCTIONAL ACCESSORIES

Every small detail has a big impact on the entire system, especially when countless accessories fill hundreds of catalog pages. Developing an accessory for every new application fundamentally contradicts our concept of a World-Class Product Range.

Our accessories are multifunctional and fit not only to an exactly defined component, but to all other components in the entire Modular Automation System.

Cover or fasten

- universally usable Cover or Insert Extrusion
- fits 40 mm and 50 mm extrusions
- suitable for mounting 4 mm to 6 mm thick panels
- covers T-slots and protects against dust and water spray
- suitable for cable routing
- easy to assemble: snap in and go

Everything is possible with a single hinge

- universal hinge fits all applications
- one hinge for all doors
- attachment of non-Robotunits components possible

Fine-tuning and Fastening element

- multifunctional Fine-Tuning and Fastening Element
- form located positioning
- infinitely adjustable
- post-assembly insertion possible

Unique clamping device allows easy attachment of parts

- facilitates mounting of 3 mm to 10 mm thick panels without drilling
- clamping device is quickly mounted by inserting it into the slot
- no drilling of panels required
- parts can be reused
- fits 40 mm and 50 mm extrusions

Save time, cut cost

- multifunctional accessories reduce your cost of ordering and your inventory overhead
- standard labeling saves even more time in assembly and storage

Multifunctional Accessories

Conveyor Technology Accessories

Speed Controller
CCN 0004

P. 144

Power Supply 24V
301437

P. 144

Connection Hub
COP 4501

P. 145

Splined Shaft
COL 8500
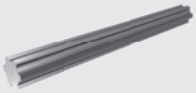
P. 145

Tilt Plate 80
TIN 4561

P. 154

Tilt Plate 80 Bent
TIN 4571

P. 155

Connection Shaft
with Couplings
COL 52_0

P. 175

Fine-Tuning and
Fixing Element
TIN 4501

P. 178

Safety Fence Floor
Bracket
BAP 205_

P. 184

Anchor Bolt
BAP 2900

P. 184

Leveling Bases
BAS ____

P. 186

Castors
CAS ____

P. 188

Safety Fence Accessories

Weld Mesh
PAN ____

P. 146

Panel
PAN ____

P. 146

Weld Mesh Clip
SSP 4520

P. 147

Mesh Retainer
SSP 4515

P. 147

Clamping Device
PIN 452_

P. 148

Panel Profile
CAL 451_

P. 149

90° Corner Piece
CAN 4501

P. 150

270° Corner Piece
CAN 4503

P. 151

Safety Fence
Fastener
TIN 4511

P. 152

90° Safety Fence
Fastener
TIN 4521

P. 153

Bolt
SSP 4900

P. 156

Screw Retainer
Screw
SSP 5500

P. 156

Handle
DOR 4501

P. 157

Magnet Holder
DOR 4541

P. 157

Door Latch
DOR 4551

P. 158

Door Catch
DOR 4553

P. 159

Door Stop
DOR 4555

P. 160

Safety Slide
DOR 4557

P. 160

Hinge
DOR 4511

P. 161

Sliding Door
Track
DOL 4034

P. 162

Roller Set
DOR 4031

P. 162

Sliding Door Stop
DOR 4032

P. 163

Centering Guide
DOR 4571

P. 163

Slider
DOR 4573

P. 163

Door Support
Castor
DOR 456_

P. 164

Floor Catch
DOR 4561

P. 165

Safety Fence Floor
Bracket
BAP 205_

P. 184

Anchor Bolt
BAP 2900

P. 184

Linear Motion System Accessories

Timing Belt Pulley
LIN 5400

P. 166

Timing Belt
LIL 3008
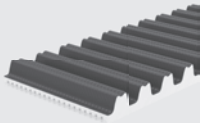
P. 167

Timing Belt Clamp
LIN 3221

P. 167

Idlers
LIN 50__
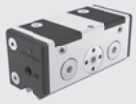
P. 168

Eccentric Key
LIN 9990

P. 169

Guiderail
LIL 5000

P. 169

Carriage Plate
LIN 1501 / 2001

P. 170

Limit Stop
LIN 5191
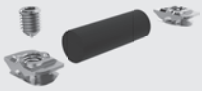
P. 170

Proximity Switch Bracket
LIN 8201
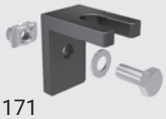
P. 171

Proximity Switch LIN 8310

P. 171

Angle Plug with Cable
LIN 8312

P. 171

Motor Flange
LIN 5241

P. 172

Coupling
LIN 523_
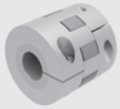
P. 172

Driveshaft/Encoder Shaft
LIN 52__

P. 173

Expanding Coupling
LIN 5246

P. 174

Encoder
LIN 7501

P. 174

Connection Shaft with Coupling
COL 5240

P. 175

General Modular Accessories

Connection Shaft with Couplings
COL 52_0

P. 175

Cover Extrusion for PIL 4012
CAL 4012

P. 176

End Cap
CAP____

P. 177

Cable Block
PIN 4530
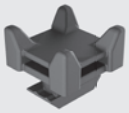
P. 177

Plastic Hook
PIN 4590

P. 178

Fine-Tuning and Fixing Element
TIN 4501

P. 178

Linear Slider
LIN 404 _/LIN 505_
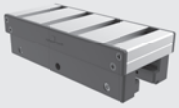
P. 179

Cover/Insert Extrusion
CAL 45_ _

P. 180

T-Slot Sliding Rail
CAL 4540
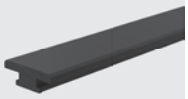
P. 181

Aluminum Cover Extrusion
CAL 4545
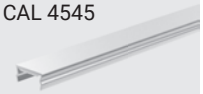
P. 181

Anti-Slip Profile
CAL 4560
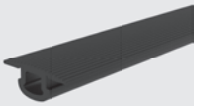
P. 182

Gasket
CAL 4565

P. 183

Safety Fence Floor Bracket
BAP 205_

P. 184

Anchor Bolt
BAP 2900

P. 184

Base and Transport Plates
BAP ____

P. 185

Leveling Bases
BAS ____

P. 186

Floor Mounting Plate
BAP 4500
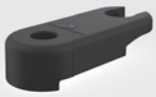
P. 187

Castors
CAS ____

P. 188

Allen Key for Hex Socket Head Cap Screws
EQL 1001_

P. 190

1/4" Hex Bit with Ball End
EQL 1005_

P. 191

CCN0004 Speed Controller

European version

Speed Controller type may vary by country / region

Application
Variable frequency drive for controlling motor speed

Technical Data
Input voltage: 230 or 400 VAC
Input frequency: 50/60 Hz
Power output: 0.75 kW
IP rating: IP66

Scope of delivery: Speed Controller un-wired or Controller with CEE oder SCHUKO plug, power cable and connecting cable to the conveyor

Completely wired when ordering with conveyor, otherwise 3 m cable with flying leads

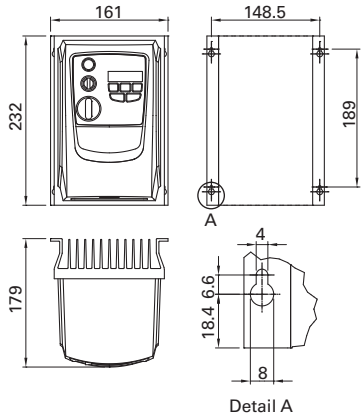

Order Code

Description	Order Code[1]	Weight
Speed Controller (not wired)	CCN0004	2,300 kg

301437 Power Supply 24V

European version

Power Supply type may vary by country / region

Application
Power supply with rotary switch for switching the conveyor on and off

A maximum of 12 motor rollers may be connected to one power supply.

Technical Data
Housing material: powder-coated RAL 7035
Operating voltage: 400 VAC
Power frequency: 50 Hz
Control voltage: 24 VDC
Power rating: 10 A
Connected load: 6.9 kW
IP rating: IP54

Scope of delivery: Power Supply 24V with CEE plug, power cable and connection cable to the conveyor

Completely wired when ordering with conveyor, otherwise 3 m cable with open end

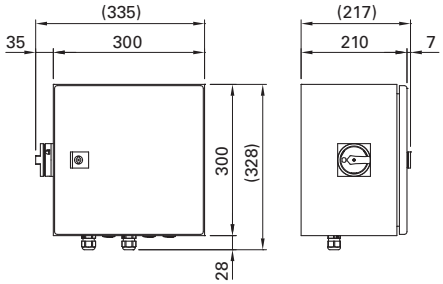

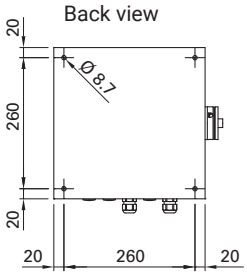

Order Code

Description	Order Code[1]	Weight
Power Supply 24V	301437	10 kg + 0.2 kg/m power cable connection

1) Please complete the order by adding the desired length of the power supply cable connection.
Drawing dimensions in mm

COP4501 Connection Hub

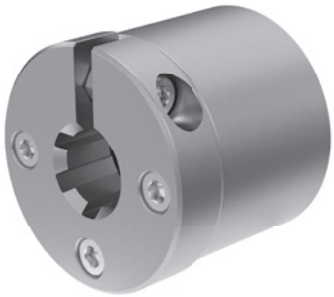

Application
For connecting adjustable timing belt conveyors

Technical Data
Max. torque: 60 Nm

Scope of Delivery
1 C8T Splined Shaft Clamping Ring
1 C8T Connection Hub
1 Expanding Coupling LIN 5246
3 screws IBM M05x016

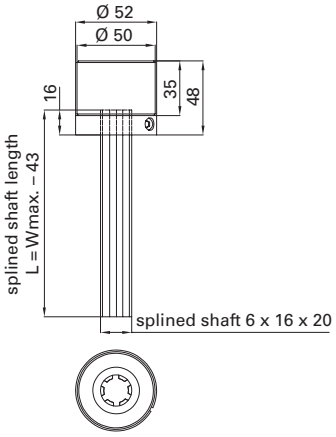

Adjustable Drive Dimensions

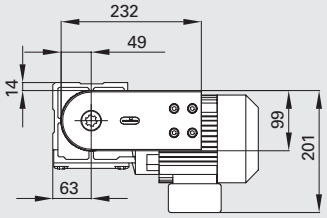

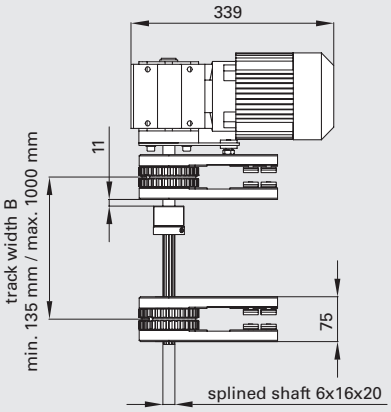

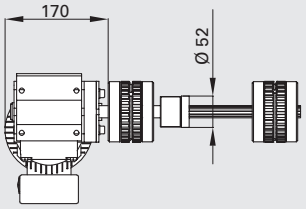

Order Code

Description	Order Code	Weight
Connection Hub Kit	COP4501	0.550 kg

COL8500 Splined Shaft

Application
For connecting adjustable timing belt conveyors

Technical Data
Max. torque: 60 Nm

Scope of Delivery
1 Splined Shaft, DIN-ISO 14 - 6x16x20

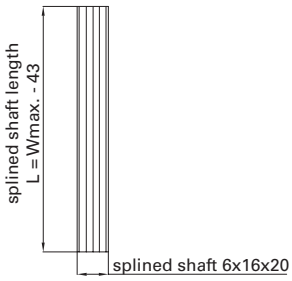

Order Code

Description	Order Code[1]	Weight
Splined Shaft, cut to length	COL8500SNN	1.930 kg/m
Splined Shaft, stock length 2000 mm	COL8500NNN	1.930 kg/m

1) Please complete the order by adding the length parameters for cut to length orders.
Drawing dimensions in mm

PAN___S4_ Weld Mesh

Application
Used for Safety Fencing

Fastening:
- Weld Mesh Clip SSP4520
- Safety Fence Mesh Retainer SSP4515

Technical Data
Material: galvanized steel

Design tip:
Standard widths and lengths offer an outstanding price/performance ratio and quick delivery.

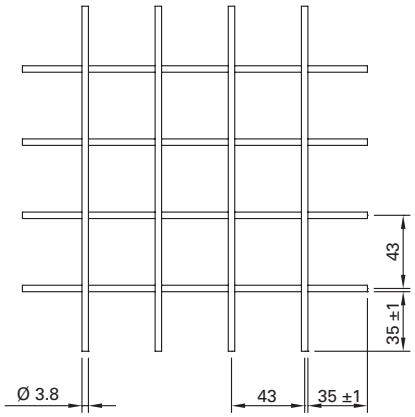

Order Code

Description	Order Code[1]	Weight
Weld Mesh, 40x40, galvanized, 461x1966 mm	PAN0461S4N	3.952 kg
Weld Mesh, 40x40, galvanized, 719x1966 mm	PAN0719S4N	6.163 kg
Weld Mesh, 40x40, galvanized, 977x1966 mm	PAN0977S4N	8.375 kg
Weld Mesh, 40x40, galvanized, 1450x1966 mm	PAN1450S4N	12.429 kg
Weld Mesh, 40x40x4 mm	PANS4S	4.360 kg/m²

PAN__N Panels

Application
Used for Safety Fencing

Fastening:
- Clamping Device PIN4521
- Cover/Insert Extrusion CAL4500, CAL4504, CAL4510
- Panel Profile CAL4515, CAL4517,
- Corner Piece CAN4501, CAN4503

Technical Data
Material: Polycarbonate glass or expanded PVC sheets, gray

Order Code

Description	Order Code[1]	Weight/m²
Polycarbonate Sheet, clear, 4 mm	PANP4N	4.800 kg
Polycarbonate Sheet, clear, 5 mm	PANP5N	6.000 kg
Polycarbonate Sheet, clear, 6 mm	PANP6N	7.200 kg
Polycarbonate Sheet, brown tinted, 4 mm	PANQ4N	4.800 kg
Polycarbonate Sheet, brown tinted, 5 mm	PANQ5N	6.000 kg
Polycarbonate Sheet, brown tinted, 6 mm	PANQ6N	7.200 kg
Expanded PVC Panel, gray similar to RAL 7004	PANG5N	3.250 kg

1) Please complete the order by adding the length and width parameters for cut orders.
Drawing dimensions in mm

SSP4520 Weld Mesh Clip

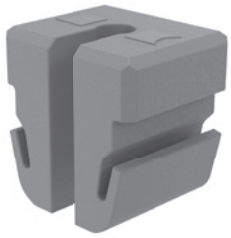

Application
For form-located integration of Weld Mesh panels into an extrusion frame

Technical Data
Material: PA6 V0
Color: RAL 7004 (signal gray)

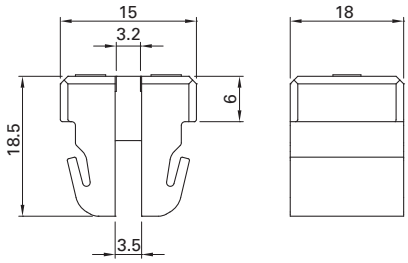

Assembly

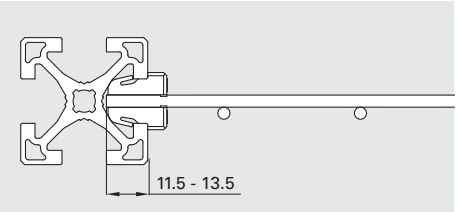

Order Code

Description	Order Code	Weight
Weld Mesh Clip	SSP4520	0.005 kg

SSP4515 Mesh Retainer

Transfer resistance per conductive connection: < 0,4 Ω

Application
For form-located integration of Weld Mesh panels into an extrusion frame
- Electrically conductive connection between weld mesh panels and extrusion frame
- can be used with non-standard spacing

Technical Data
Material: steel

Scope of Delivery
1 Mesh Retainer SSP4514
1 Set Screw GST M08x025 (waxed)

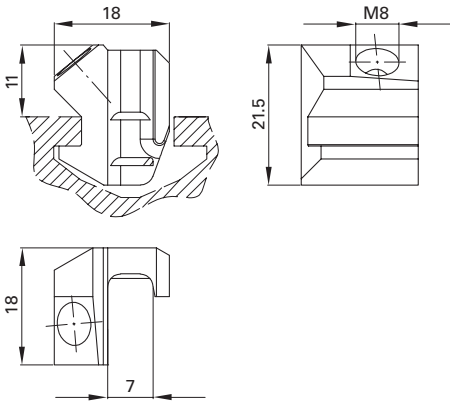

Assembly

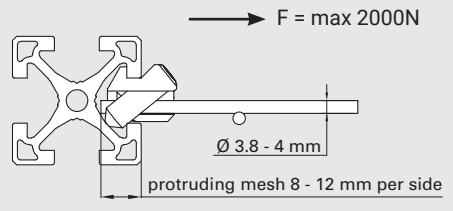

Order Code

Description	Order Code	Weight
Mesh Retainer Kit	SSP4515	0.025 kg

Drawing dimensions in mm

PIN452_ Clamping Device

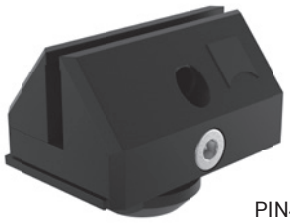

PIN4521

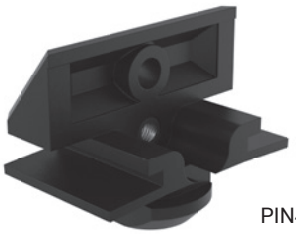

PIN4520

PIN4522

Application
For attaching panels to extrusions, usable with 40 mm and 50 mm series extrusions
- As standard, panels do not need to be drilled
- High retention force

Technical Data
Material: PA6, black, galvanized steel
Load: up to 250 N, perpendicular to slot
Centerline: 1 - 10 mm
Protection against inadvertent movement of panels through pre-tensioning of clamps

Retention Force
Without pin: 200 N
With pin (101857): 1500 N
(Polycarbonate glass)

Scope of Delivery
1 Clamping Device base part
1 Clamping Device sliding part
1 Screw IBS M04x25
1 Screw Retainer

Panel size =
inside width minus 15 mm

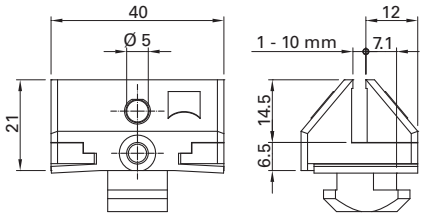

Screw Retainer

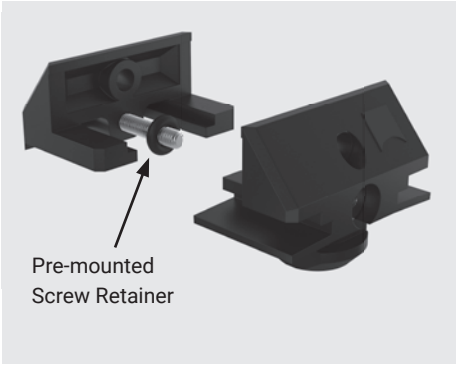

Assembly

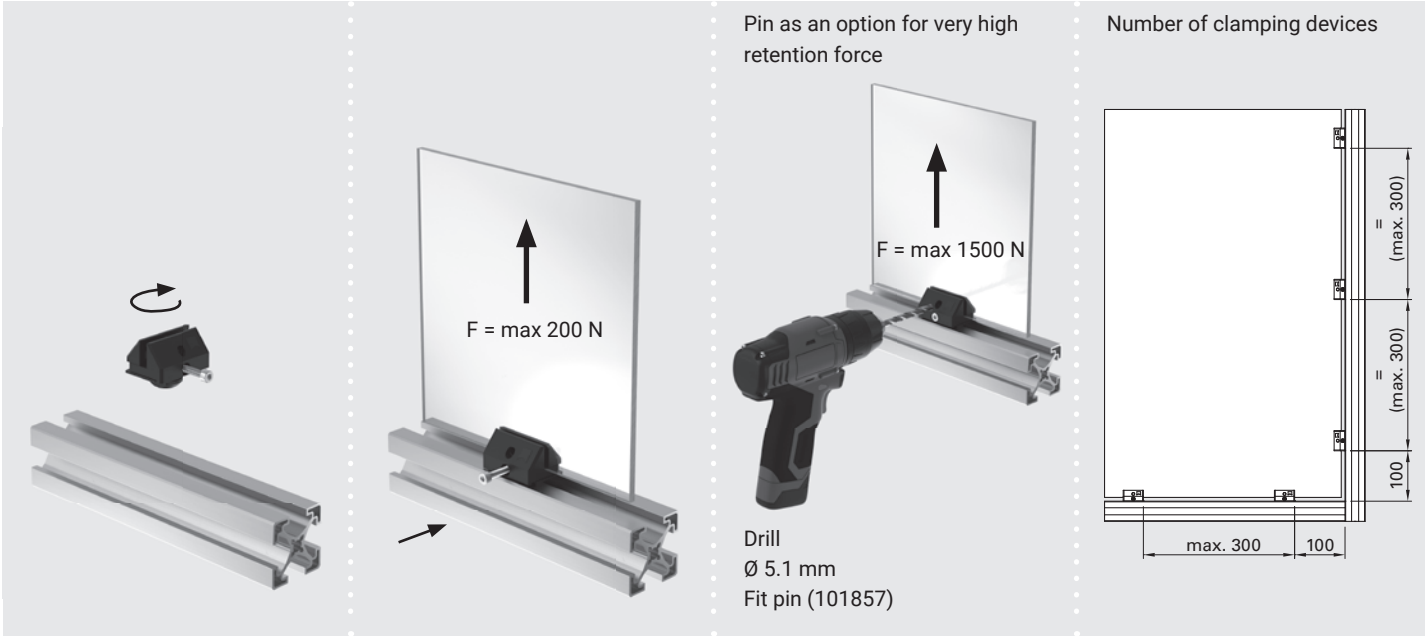

Order Code

Description	Order Code	Weight
Clamping Device Kit	PIN4521	0.021 kg
Clamping Device base part, incl. insert nut	PIN4520	0,010 kg
Clamping Device sliding part, pre-assembled	PIN4522	0,011 kg
Pin	101857	0.002 kg

Drawing dimensions in mm

CAL451_ Panel Profile

Application
For fastening of panels between 1 - 3 mm and 3.1 - 6 mm thick, also suitable for later installation

- Adequate protection against dust, water spray and noise
- Appealing design

Technical Data
Material: impact-resistant PVC with soft lip, RAL 7004 (signal gray), UV-resistant, silicone-free
Temperature range: -10°C to +60°C

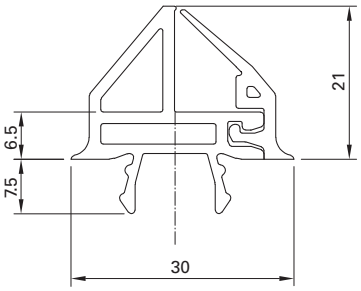

Assembly

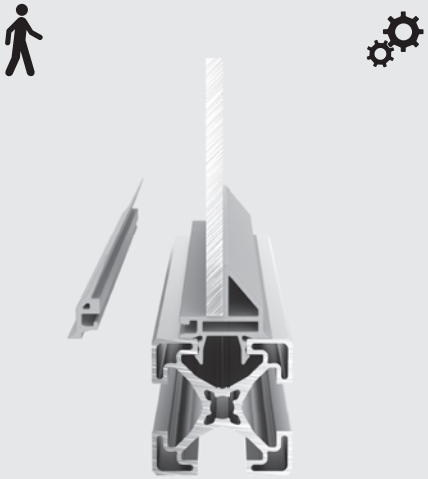

Snap in base, apply gasket

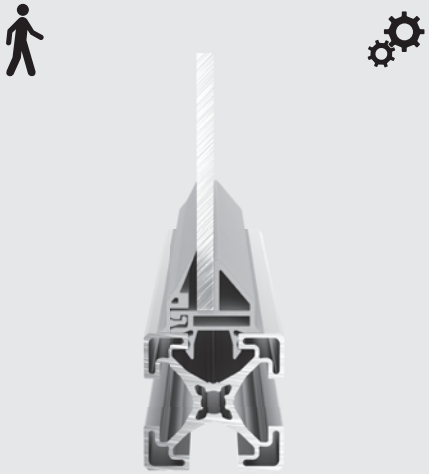

Fastened panel

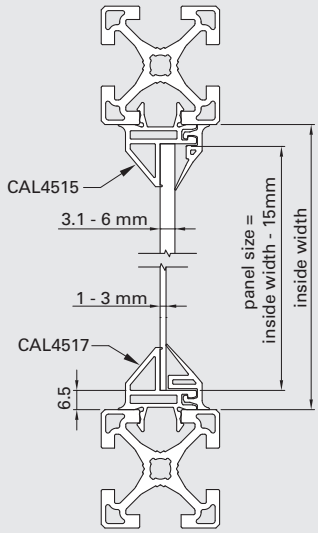

Length Calculation

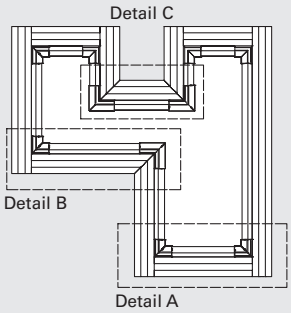

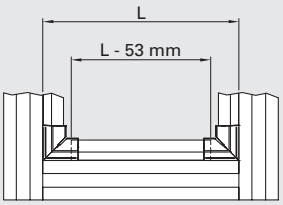

Detail A: 90° corner piece with 90° corner piece

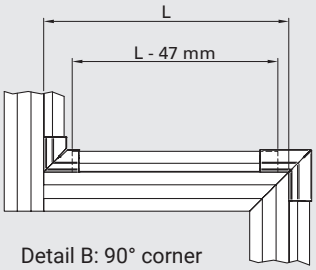

Detail B: 90° corner piece with 270° corner piece

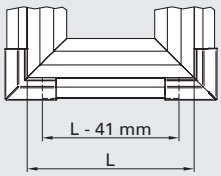

Detail C: 270° corner piece with 270° corner piece

Order Code

Description	Order Code[1]	Weight/Meter
Panel Profile 3.1 – 6 mm, cut to length	CAL4515SNN	0.280 kg
Panel Profile 3.1 – 6 mm, stock length 3000 mm	CAL4515NNN	0.280 kg
Panel Profile 3.1 – 6 mm, 25 pcs., stock length 3000 mm	CAL4515PAC	0.280 kg
Panel Profile 1 – 3 mm, cut to length	CAL4517SNN	0.280 kg
Panel Profile 1 – 3 mm, stock length 3000 mm	CAL4517NNN	0.280 kg
Panel Profile 1 – 3 mm, 25 pcs., stock length 3000 mm	CAL4517PAC	0.280 kg

1) Please complete the order by adding the length parameters for cut to length orders.
Drawing dimensions in mm

CAN4501 90° Corner Piece

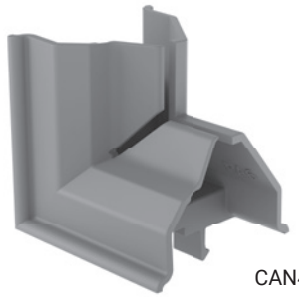

CAN4501

Application
Used as 90° corner trim for Panel Profiles CAL4515 and CAL4517

Technical Data
Material: POM, UV-resistant, silicone-free
Color: RAL 7004 (signal gray)
Temperature Range: -10 °C to +60 °C

Scope of Delivery
1 90° Corner Piece base part
1 90° Corner Piece top part

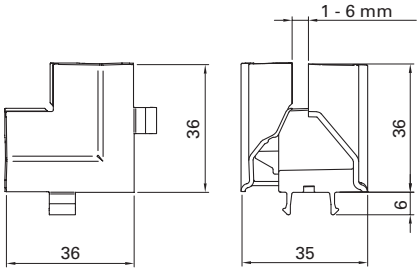

Parts

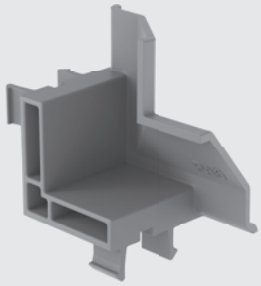

90° Corner Piece base part (101419)

+

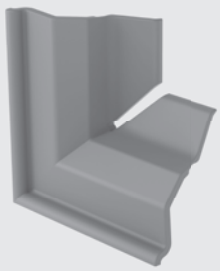

90° Corner Piece top part (101420)

=

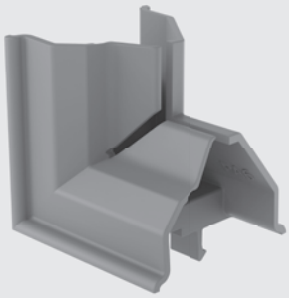

90° Corner Piece Kit (CAN4501)

Assembly

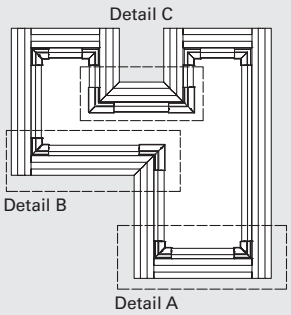

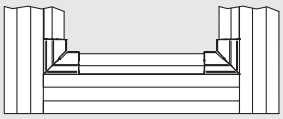

Detail A: 90° Corner Piece with 90° Corner Piece

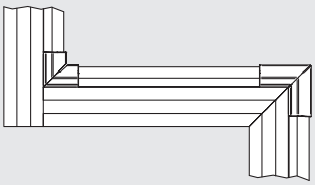

Detail B: 90° Corner Piece with 270° Corner Piece

Order Code

Description	Order Code	Weight
90° Corner Piece Kit	CAN4501	0.010 kg
90° Corner Piece base part	101419	0,006 kg
90° Corner Piece top part	101420	0,004 kg

Drawing dimensions in mm

CAN4503 270° Corner Piece

CAN4503

Application
Used as 270° corner trim for Panel Profiles CAL4515 and CAL4517

Technical Data
Material: PA6, UV-resistant, silicone-free
Color: RAL 7004 (signal gray)
Temperature Range: -10 °C to +60 °C

Scope of Delivery
1 270° Corner Piece base part
1 270° Corner Piece top part

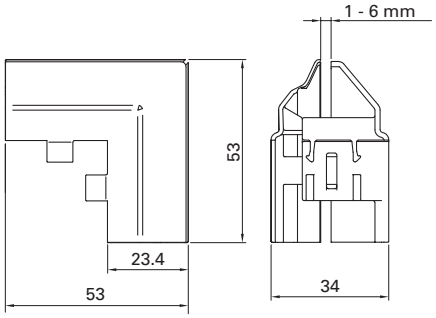

A 45° miter cut of the extrusion is necessary if the 270° Corner Piece is to be used.

Parts

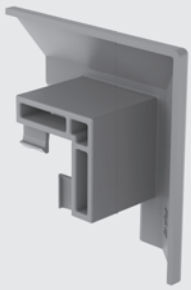

270° Corner Piece base part (101421)

+

270° Corner Piece top part (101422)

=

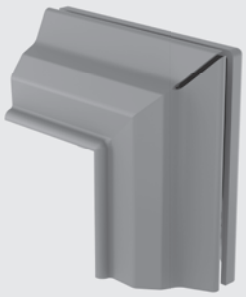

270° Corner Piece Kit (CAN4503)

Assembly

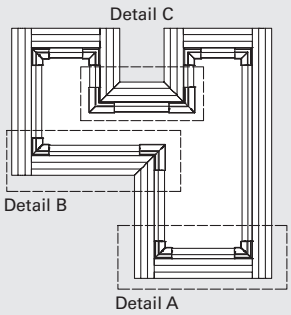

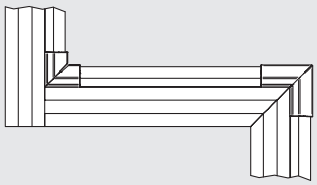

Detail B: 90° Corner Piece with 270° Corner Piece

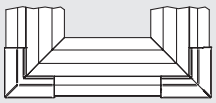

Detail C: 270° Corner Piece with 270° Corner Piece

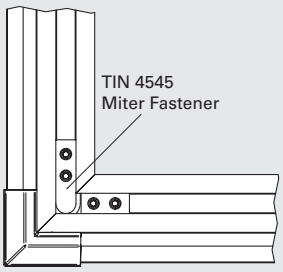

45° miter cut

Order Code

Description	Order Code	Weight
270° Corner Piece Kit	CAN4503	0.012 kg
270° Corner Piece base part	101421	0,008 kg
270° Corner Piece top part	101422	0,004 kg

Drawing dimensions in mm

TIN4511 Safety Fence Fastener

Application
For variable fastening options of safety fence components
- 90° connections of extrusions and as end cap
- Strong connection between panels

Technical Data
Material: galvanized steel

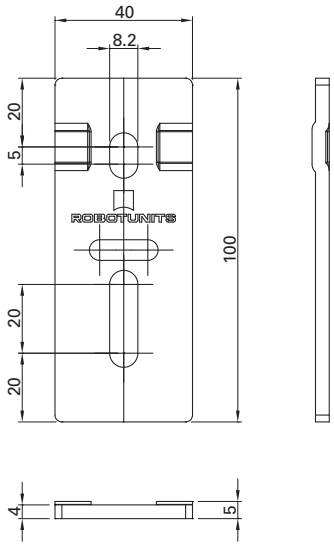

Assembly

Sturdy connection between panels

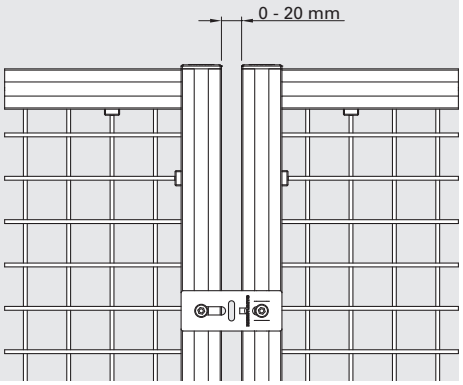

Order Code

Description	Scope of Delivery			Order Code	Weight
	TIN4510	TIN4508	IBS M08x016NIKO		
Safety Fence Fastener Kit	1	2	2	TIN4511	0.150 kg

Drawing dimensions in mm

TIN4521 90° Safety Fence Fastener

Application
For variable fastening options of safety fence components

- 90° connections of extrusions and as end cap
- Strong connection between panels
- Adjustable corner brackets from 0° to 180°

Technical Data
Material: galvanized steel

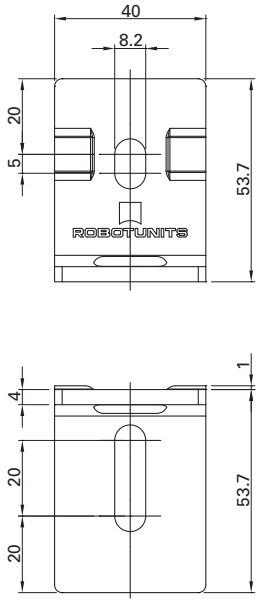

Assembly

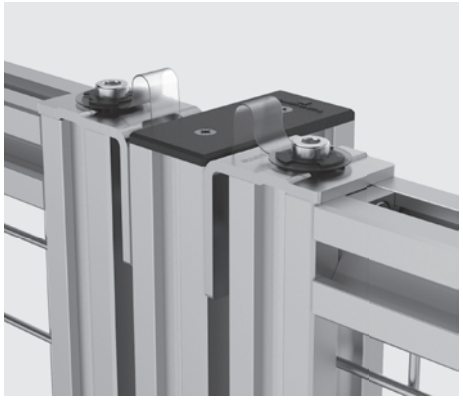

Order Code

Description	Scope of Delivery TIN4520	TIN4508	IBS M08x016NIKO	Order Code	Weight
90° Safety Fence Fastener Kit	1	2	2	TIN4521	0.150 kg

Drawing dimensions in mm

TIN4561 Tilt Plate 80

Application
Variable connection of modular components
- Sturdy connection of conveyor and stand
- Infinitely adjustable incline

Technical Data
Material: galvanized steel

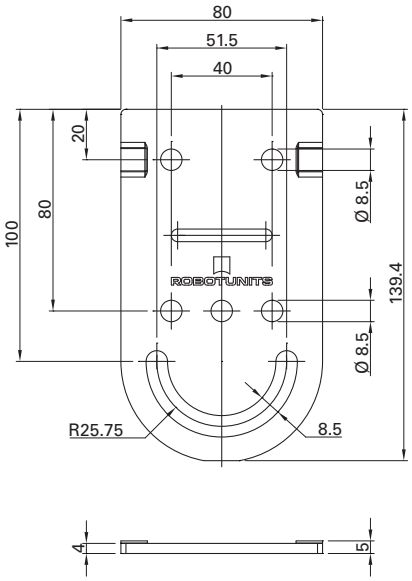

Application

Connection of conveyor and stand

Possible inclination settings

40 mm series

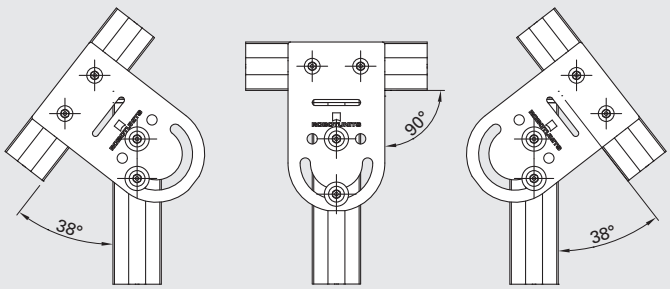

80 mm series

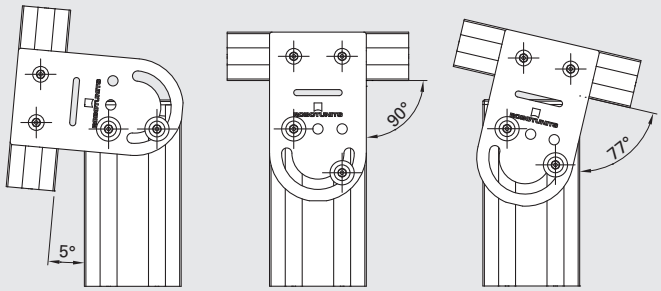

Order Code

	Scope of Delivery				Order Code	
Description	TIN4530	TIN4508	IBS M08x016NIKO	BLS M008S02		Weight
Tilt Plate 80 Kit	1	4	4	2	TIN4561	0.370 kg

Drawing dimensions in mm

TIN4571 Tilt Plate 80 Bent

Application
Variable connection of modular components
- Workplace applications e.g. for shelves
- Infinitely adjustable incline (Bracket as with TIN 4531)

Technical Data
Material: galvanized steel

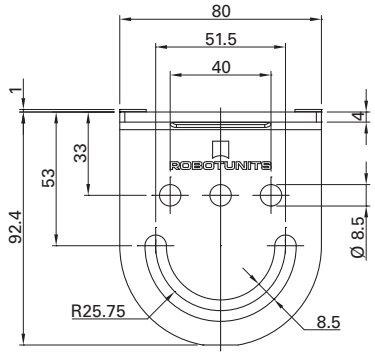

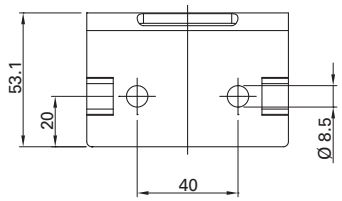

Application

Workstation

Order Code

	Scope of Delivery				Order Code	
Description	TIN 4540	TIN 4508	IBS M08x016NIKO	BLS M008S02		Weight
Tilt Plate 80 Bent Kit	1	4	4	2	TIN4571	0.370 kg

Drawing dimensions in mm

SSP4900 Bolt

Application
For mounting Allround Panels

Technical Data
Material: nitrated steel

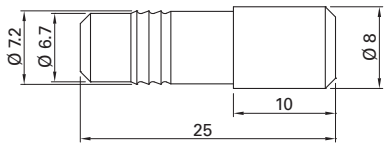

Function

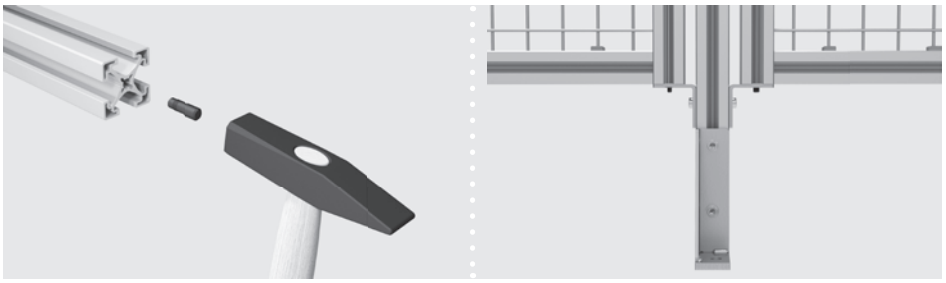

Order Code

Description	Order Code	Weight
Bolt	SSP4900	0.010 kg

SSP5500 Screw Retainer

Application
For securing M8 retaining screws
(e.g. for Allround Panel)

Technical Data
Material: PVC and PA

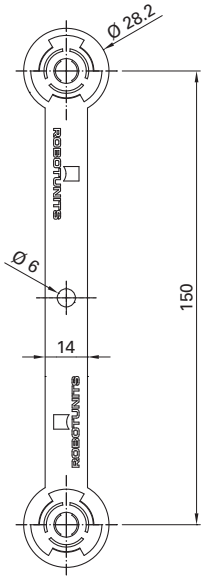

Application

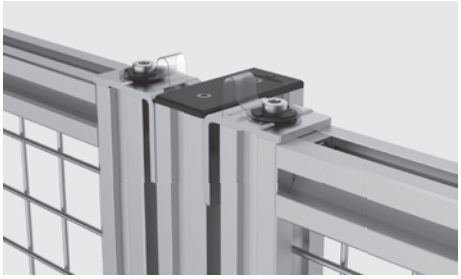

Order Code

Description	Order Code	Weight
Screw Retainer	SSP5500	0.001 kg

Drawing dimensions in mm

DOR4501 Handle

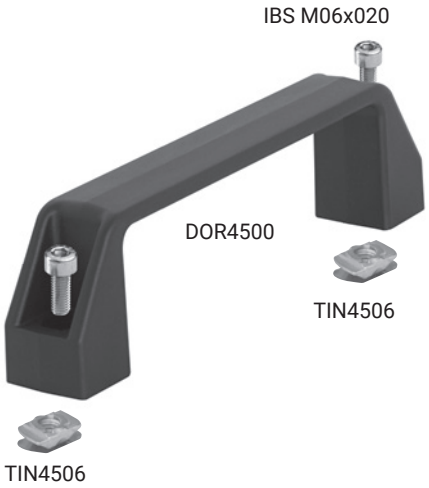

Application
For use with doors, panels, carts etc.

Technical Data
Material: PA/GF composite, galvanized steel

Retention Force

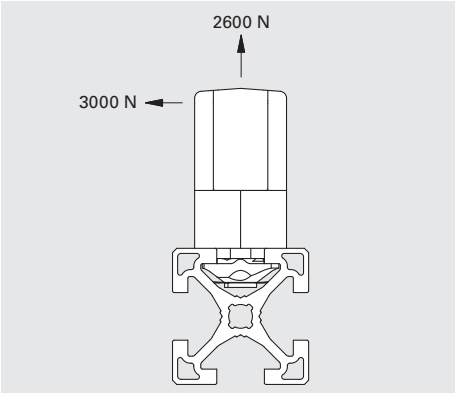

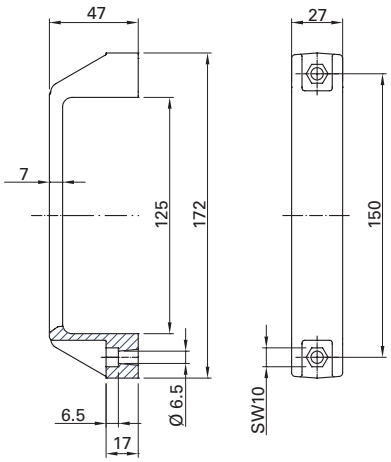

Order Code

Description	Scope of Delivery DOR4500	TIN4506	IBS M06x020	Order Code	Weight
Handle Kit	1	2	2	DOR4501	0.100 kg

DOR4541 Magnet Holder

Retention Force: front 20 N, back 8 N

Application
Closing device for frameless doors

Technical Data
Material: POM composite, black, galvanized steel

Application

Swinging door

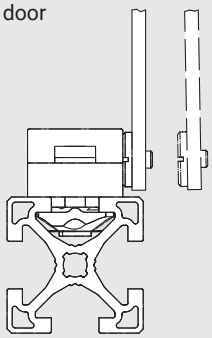

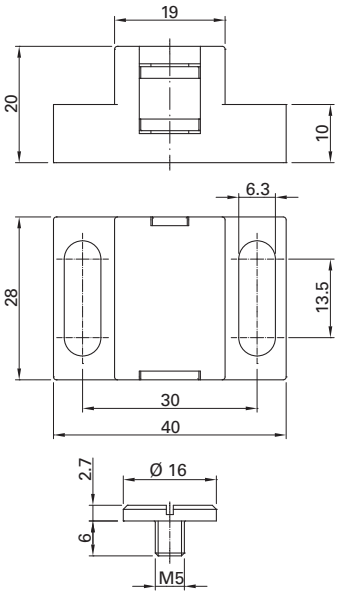

Order Code

Description	Scope of Delivery DOR4540	TIN4506	IBS M06x020	BLS M006	Order Code	Weight
Magnet Holder Kit	1	2	2	2	DOR4541	0.075 kg

DOR4551 Door Latch

DOR4550

TIN4506

Application
To latch door panels directly to door posts. Door can only be opened by pushing the door latch. Suitable for 40 mm and 50 mm series extrusions.

Technical Data
Material: PA6 30 GF, black, galvanized steel

For extra security.

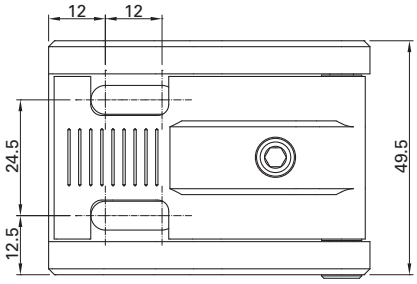

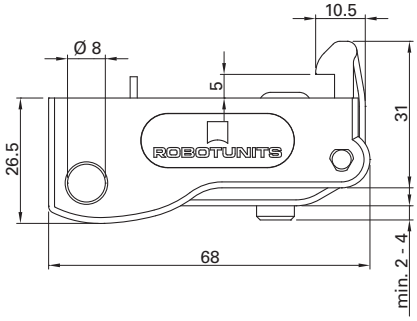

Application

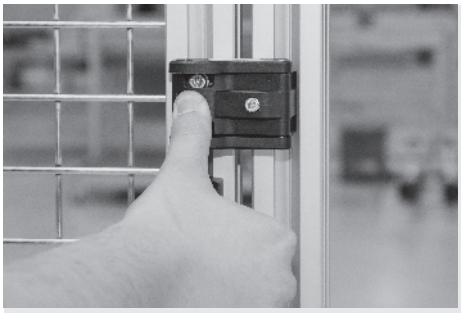

Secure: Push latch to open door.

Door latch can be **secured with a padlock against inadvertent opening**. Lock bolt diameter: 7 mm

Door latch can be **secured with a padlock against inadvertent closing**. Lock bolt diameter: 7 mm

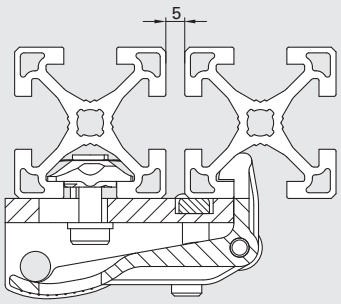

Application: door latch in 40 mm series

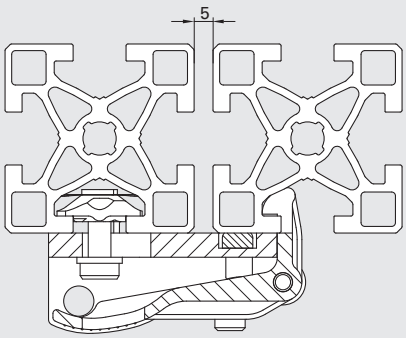

Application: door latch in 50 mm series

Adjustable pre-tension for optimal retention force. Set screw must always protrude by at least 2 mm.

Order Code

	Scope of Delivery		Order Code	
Description	DOR4550	TIN4506		Weight
Door Latch Kit	1	2	DOR4551	0.100 kg

Drawing dimensions in mm

DOR4553 Door Catch

DOR4552

TIN4506

Application
To latch door panels directly to door posts. Door can be opened by pulling door handle. Suitable for 40 mm and 50 mm series extrusions.

Technical Data
Material: PA6 30 GF, black, galvanized steel

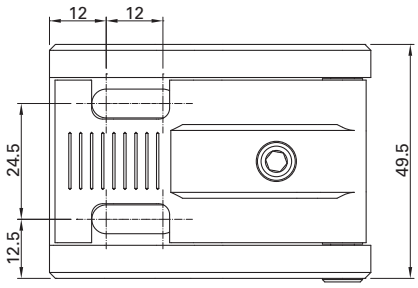

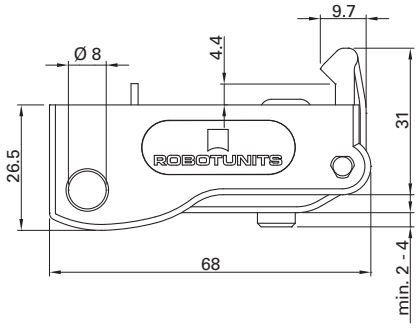

Application

Pull to release and open.

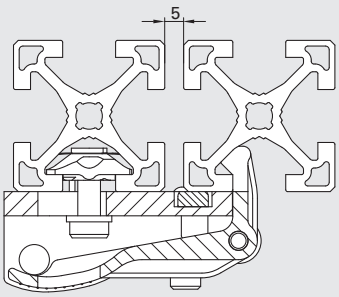

Application of door latch in 40 mm series

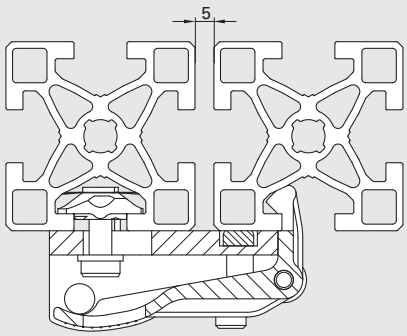

Application of door latch in 50 mm series

Adjustable pre-tension for optimal retention force. Set screw must always protrude by at least 2 mm.

Order Code

	Scope of Delivery		Order Code	
Description	DOR4552	TIN4506		Weight
Door Catch Kit	1	2	DOR4553	0.100 kg

Drawing dimensions in mm

DOR4555 Door Stop

Application
Used as a fixed door stop

Technical Data
Material: PA6 30 GK, galvanized steel

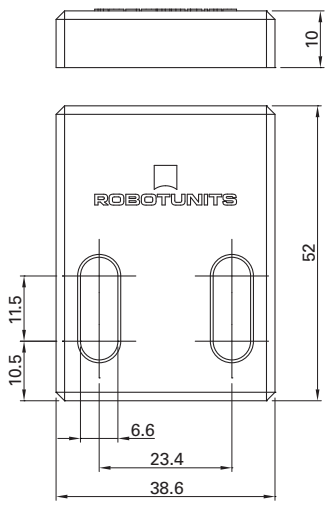

Order Code

Description	Scope of Delivery				Order Code	Weight
	DOR4554	TIN4506	IBS M06x020	BLS M006		
Door Stop Kit	1	2	2	2	DOR4555	0.020 kg

DOR4557 Safety Slide

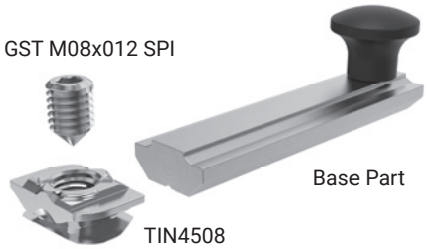

Application
Prevents inadvertent closing of doors. Suitable for 40 mm and 50 mm series extrusions.

Technical Data
Material: galvanized steel; Duroplast

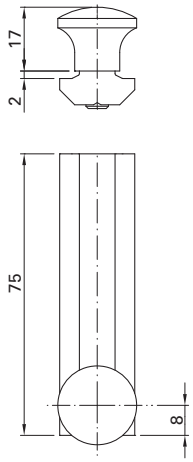

Application

Door is open:

Door is closed: Safety slide sits on the door latch. Safety slide falls down onto the drop-in nut and prevents the door from being inadvertently closed.

Door will be closed: To close the door, the safety slide must be manually lifted.

Order Code

Description	Scope of Delivery			Order Code	Weight
	Base Part	TIN4508	GST M08x012 SPI		
Safety Slide Kit	1	1	1	DOR4557	0.090 kg

Drawing dimensions in mm

DOR4511 Hinge

Application
For hinged structures. Inserts allow for use with 40 mm and 50 mm series extrusions.

Technical Data
Material: GD-Zn black, coated, galvanized steel

Tightening torque
IBS M06x016NIKO = 9 Nm

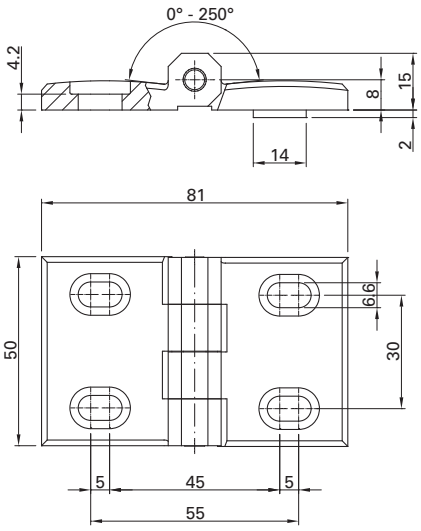

Assembly

Use with 50 mm series facing outwards

Use with 40 mm series turned towards pivot

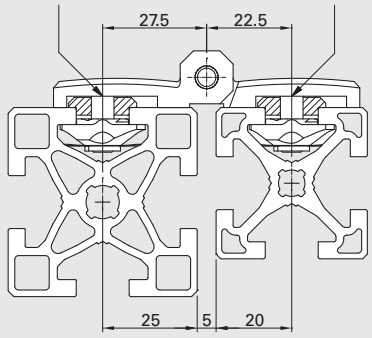

Order Code

	Scope of Delivery			Order Code	
Description	DOR4510	TIN4506	IBS M06x016NIKO		Weight
Hinge Kit	1	4	4	DOR4511	0.222 kg

Drawing dimensions in mm

DOL4034 Sliding Door Track

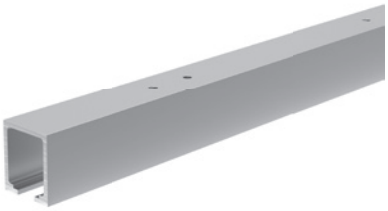

Application
For sliding doors

Technical Data
Material: clear anodized aluminum

Hole spacing = 220 mm
Max. load = 80 kg per sliding door

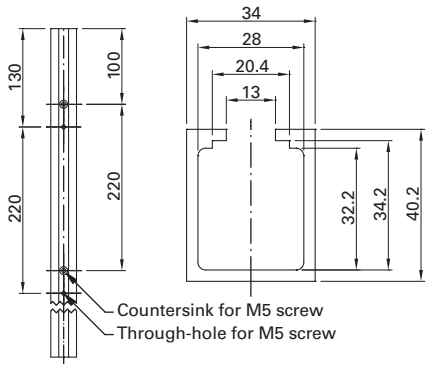

Order Code

Description	Order Code[1]	Weight/Meter
Sliding Door Track, cut to length	DOL4034SNN	0.996 kg
Sliding Door Track, stock length 6050 mm	DOL4034NNN	0.996 kg

DOR4031 Roller

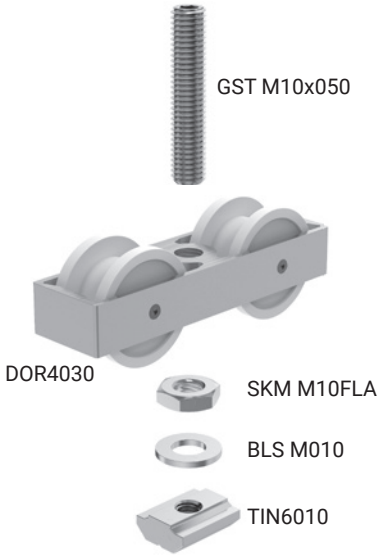

Application
Sliding Door

Technical Data
Material: clear anodized aluminum,
PA6 white, galvanized steel

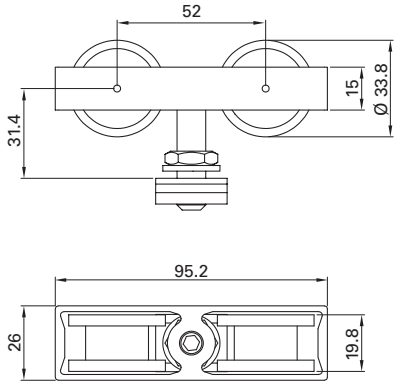

Order Code

Description	Scope of Delivery					Order Code	Weight
	DOR4030	TIN6010	SKM M10FLA	GST M10x050	BLS M010		
Roller Kit	1	1	1	1	1	DOR4031	0.140 kg

1) Please complete the order by adding the length parameters for cut to length orders.
Drawing dimensions in mm

DOR4032 Sliding Door Stop

Application
Mechanical stop and retainer for sliding door

Technical Data
Material: aluminum, galvanized steel, rubber

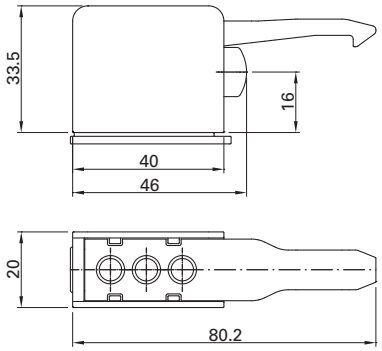

Application

Rubber stop with retention spring

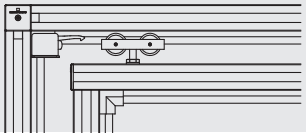

Order Code

Description	Order Code	Weight
Sliding Door Stop	DOR4032	0.126 kg

DOR4571 Centering Guide

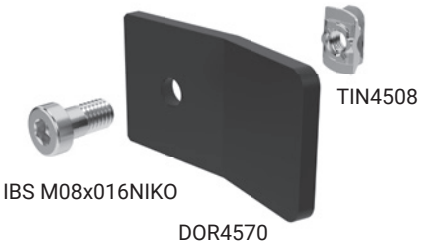

Application
For sliding doors

Technical Data
Material: powder-coated steel

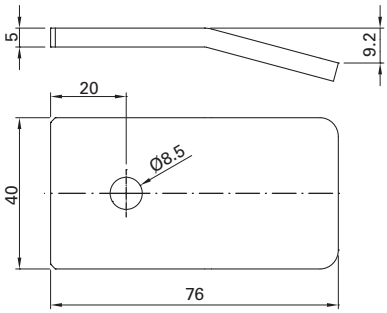

Order Code

Description	Scope of Delivery			Order Code	Weight
	DOR4570	TIN4508	IBS M08x016NIKO		
Centering Guide Kit	1	1	1	DOR4571	0.100 kg

DOR4573 Slider

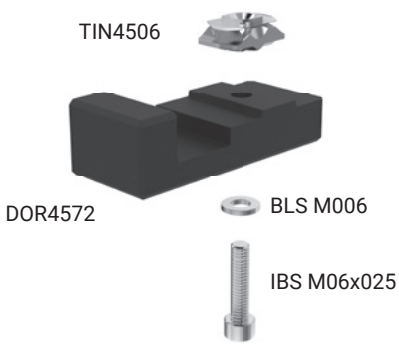

Application
For sliding doors

Technical Data
Material: black POM composite

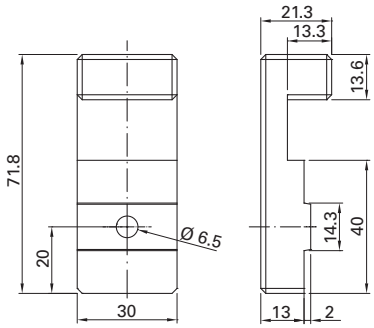

Order Code

Description	Scope of Delivery				Order Code	Weight
	DOR4572	TIN4506	IBS M06x025	BLS M006		
Slider Kit	1	1	1	1	DOR4573	0.060 kg

DOR456_ Door Support Castor

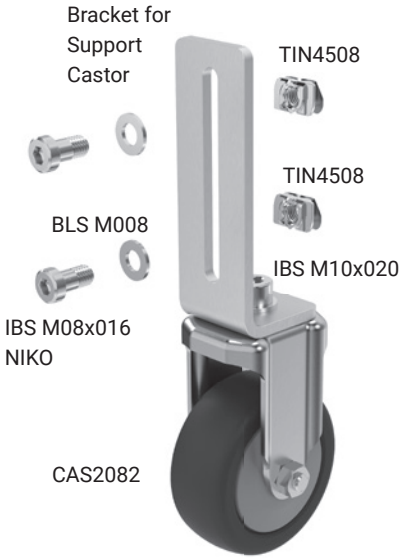

Door Support Castor Kit, rigid

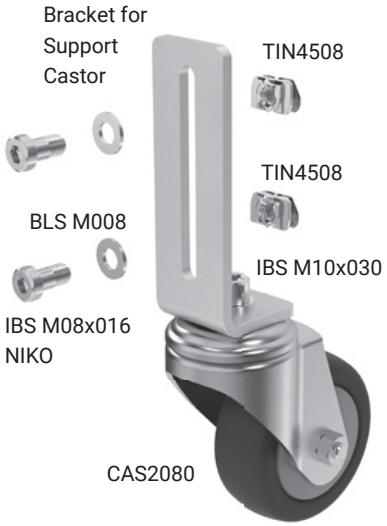

Door Support Castor Kit, swivel

Application
Rolling support for panels, doors

Technical Data
Material: clear anodized aluminum, galvanized steel, rubber

Scope of Delivery
Door Support Castor Kit, rigid DOR4565:
1 Rigid Castor with Bolt Hole Fitting CAS2082
1 Bracket for Support Castor
1 Screw IBS M10x020
2 Washers BLS M010
1 Hexagon Nut SKM M10
2 Screws IBS M08x016NIKO
2 Drop-in Nuts TIN4508
2 Washers BLS M008

Door Support Castor Kit, swivel DOR4567:
1 Swivel Castor with Bolt Hole Fitting CAS2080
1 Bracket for Support Castor
1 Screw IBS M10x030
2 Washers BLS M010
1 Hexagon Nut SKM M10
2 Screws IBS M08x016NIKO
2 Drop-in Nuts TIN4508
2 Washers BLS M008

Door Support Castor Kit, rigid

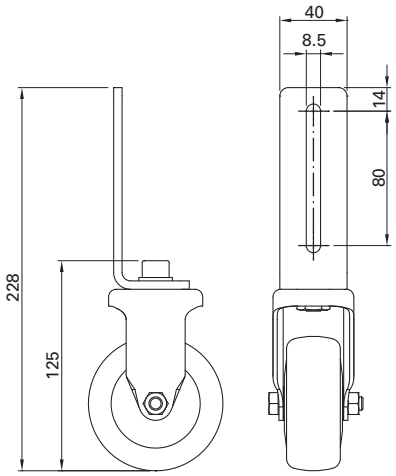

Door Support Castor Kit, swivel

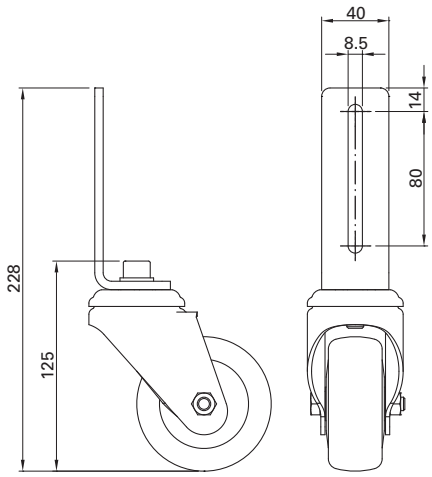

Order Code

Description	Order Code	Weight
Door Support Castor Kit, rigid	DOR4565	0.510 kg
Door Support Castor Kit, swivel	DOR4567	0.680 kg

Drawing dimensions in mm

DOR4561 Floor Catch

Application
For double door

Technical Data
Material: galvanized steel, PA/GF composite

Scope of Delivery
1 Floor Catch Base Part
1 Handle DOR4500
2 Screws M06x020
4 Washers BLS M006
1 Spring-Loaded Pressure Part with Band and Hexagon Socket-Head GST M06x015FED

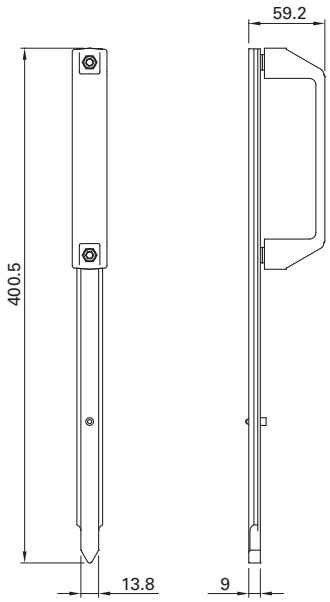

Application

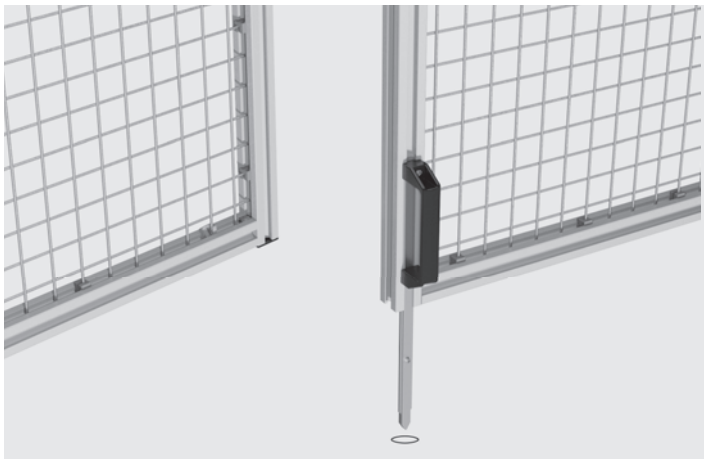

Catch latches into recess in floor.
Bore
Ø 14 mm

Order Code

Description	Order Code	Weight
Floor Catch Kit	DOR4561	0.545 kg

Drawing dimensions in mm

LIN5400 Timing Belt Pulley

Application
Drive and idler pulley for Linear Motion Unit, suitable for 50 mm series extrusions.

Technical Data
Material: black anodized aluminum, steel
Max. drive torque: 60 Nm
Carriage stroke per revolution: 200 mm
Pitch circle diameter: 63.66 mm

Flange plates for motor connection are available upon request.

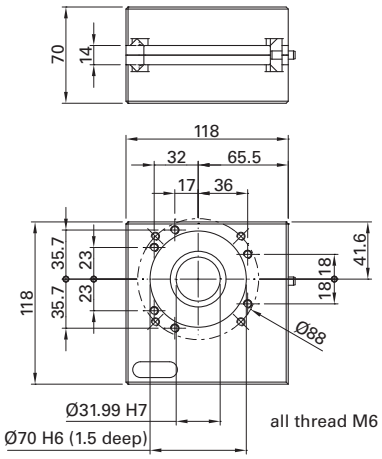

Application

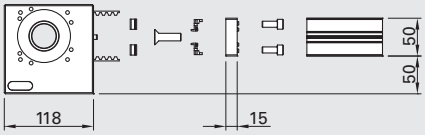

Connection Option LIN5451
For connecting to extrusions:
50x50, 50x100 flat, 50x200 flat

Scope of Delivery
1 Timing Belt Pulley LIN5400
1 Fastener 50x50 FAS5050
2 Centering Inserts FAS5052
2 Drop-in Nuts TIN4508
2 Screws IBS M08x020
1 screw IBS M10x035

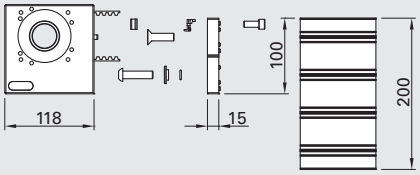

Connection Option LIN5421
For connecting to extrusions:
50x200 upright

Scope of Delivery
1 Timing Belt Pulley LIN5400
1 Fastener 50x50 FAS5050
1 Fastener 50x50 FAS5050, modified
1 FAS5052 centering insert
1 Drop-in Nut TIN4508
1 screw IBS M08x020
1 screw IBS M10x035
1 TIN plate for Special Fastener 50 with O-ring and screw LKS M10x040

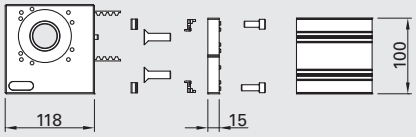

Connection Option LIN5411
For connecting to extrusions:
50x100 upright, 100x100

Scope of Delivery
1 Timing Belt Pulley LIN5400
1 Fastener 50x50 FAS5050
1 Fastener 50x50 FAS5050, modified
2 Centering Inserts FAS5052
2 Drop-in Nuts TIN4508
2 Screws IBS M08x020
2 Screws SKS M10x035

Order Code

Description	Order Code	Weight
Timing Belt Pulley	LIN5400	1.660 kg
Timing Belt Pulley with Fastening Kit 100	LIN5411	1.950 kg
Timing Belt Pulley with Fastening Kit 200	LIN5421	2.000 kg
Timing Belt Pulley with Fastening Kit 50	LIN5451	2.050 kg

1) Please complete the order by adding the length parameters for cut to length orders.
Drawing dimensions in mm

LIL3008 Timing Belt

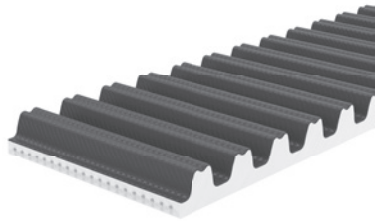

Timing Belt Length Calculation
TL (Total Length), SL (Stroke Length),
L (Timing Belt Length):
L = 2 x TL - 136 or L = 2 x SL + 944

Application
Power transmission from drive to carriage.

Technical Data/Scope of Delivery
Material: PU timing belt, white,
PAZ coating on toothed side,
Max. tensile load: 2000 N
Recommended pre-tension of timing belt:
0.1 % = approx. 500 N pre-tension
Timing Belt designation: RPU-8M-30-PAZ

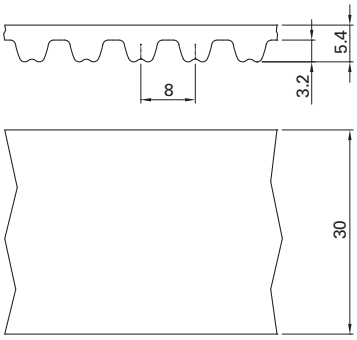

Order Code

Description	Order Code[1]	Weight/Meter
Timing Belt RPU-8M-30-PAZ, cut to length	LIL3008	0.155 kg

LIN3221 Timing Belt Clamp

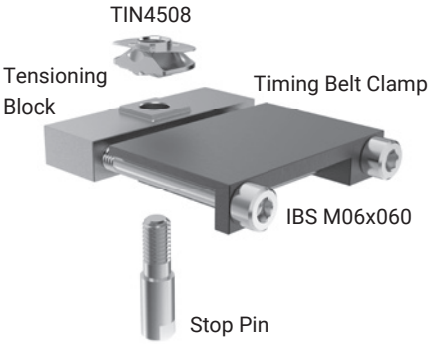

Application
For attaching and tensioning the timing belt

Technical Data
Material: black anodized aluminum, stainless steel, galvanized steel
Max. tensile load: 2000 N

Scope of Delivery
1 Tensioning Block
1 Timing Belt Clamp
1 Stop Pin
4 Timing Belt Pins
2 Screws IBS M06x060
1 Drop-in Nut TIN 4508

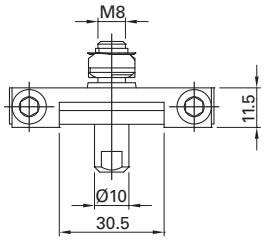

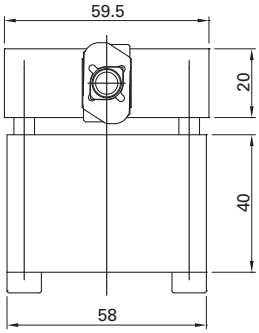

Application

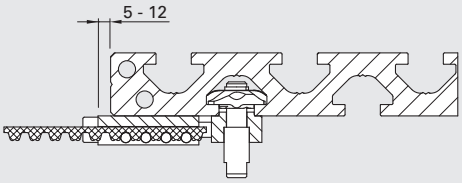

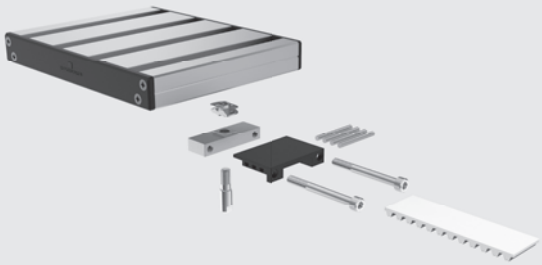

Order Code

Description	Order Code	Weight
Timing Belt Clamp Kit	LIN3221	0.205 kg

LIN500_ Single Idler

Application
Roller device for Linear Motion Units, integrated felt wipers for cleaning and lubrication.

Technical Data
Material: clear or black anodized aluminum, black, tempered steel or galvanized steel, black PA6 composite, pressed felt

Bearing load capacity per single idler
Radial: max. 1500 N
Axial: max. 750 N

The carriage is adjusted using the eccentric idlers and an eccentric Eccentric Key LIN9990.
Assembly instructions: page 195

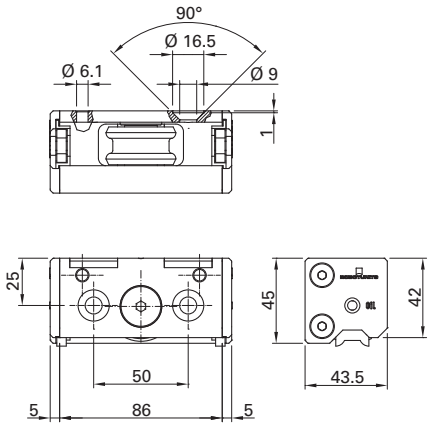

Order Code

Description	Scope of Delivery LIN5000	LIN5002	Grooved pin	SKS M08x055	Order Code	Weight
Single Idler Kit, concentric	1		2	2	LIN5001	0.375 kg
Single Idler Kit, eccentric		1	2	2	LIN5003	0.375 kg

LIN501_ Double Idler

Application
Roller device for Linear Motion Units, integrated felt wipers for cleaning and lubrication.

Technical Data
Material: clear or black anodized aluminum, black, tempered steel or galvanized steel, black PA6 composite, pressed felt

Bearing load capacity per double idler
Radial: max. 3000 N
Axial: max. 1500 N

The carriage is adjusted using the eccentric idlers and an eccentric Eccentric Key LIN9990.
Assembly instructions: page 195

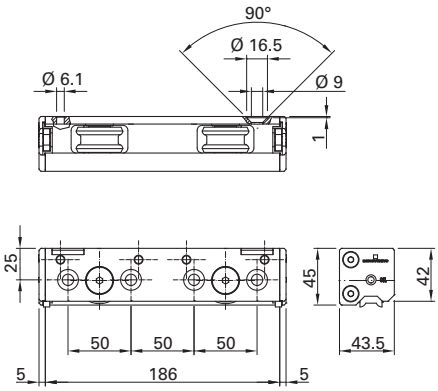

Order Code

Description	Scope of Delivery LIN5010	LIN5012	Grooved pin	SKS M08x055	Order Code	Weight
Double Idler Kit, concentric	1		4	4	LIN5011	0.755 kg
Double Idler Kit, eccentric		1	4	4	LIN5013	0.755 kg

LIN9990 Eccentric Key

Application
For adjusting and tightening the eccentric bolt of the Idlers

Technical Data
Material: galvanized steel

Order Code

Description	Order Code	Weight
Eccentric Key	LIN9990	0.177 kg

LIL5000 Guiderail

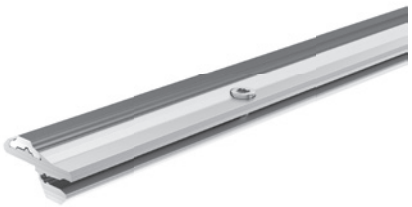

Application
Guide rollers can be added later to any 50 mm series extrusions

Technical Data
Material: tempered, brushed steel
HRC 58 +3, clear anodized aluminum

Scope of Delivery
Guiderail, Rolled Steel
and Aluminum
screw IBS M06x012 NIKO

Tightening torque
IBS M06x012NIKO = 12 Nm

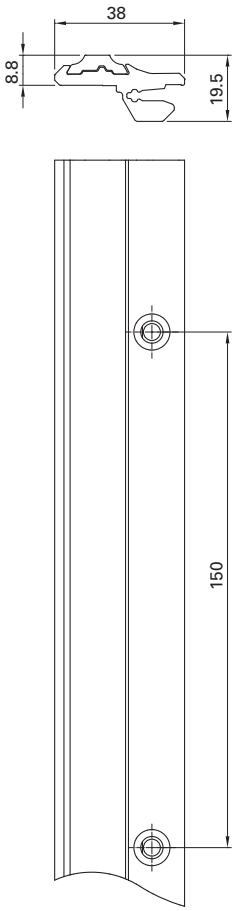

Assembly

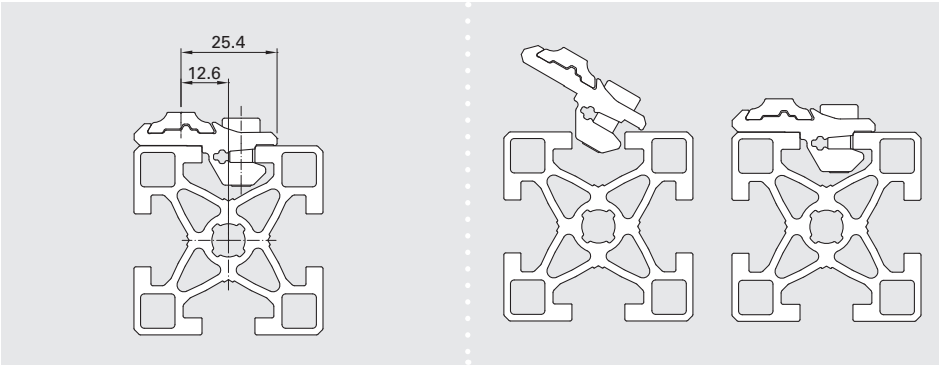

Order Code

Description	Order Code[1]	Weight/Meter
Guiderail, cut to length	LIL5000SNN	1.105 kg
Guiderail, stock length 6050 mm	LIL5000NNN	1.105 kg

1) Please complete the order by adding the length parameters for cut to length orders.
Drawing dimensions in mm

LIN1501 / LIN2001 Carriage Plate

Application
- Carriage Plate for mounting components
- Assembled with Double Idlers

Technical Data
Material: clear anodized aluminum, PA6 black

Scope of Delivery
1 Carriage Plate
2 End Caps CAP2521

Carriage plate 50 (length 150) = LIL 5010
Carriage plate 100 (length 200) = LIL 1010
Assembly instructions: page 195

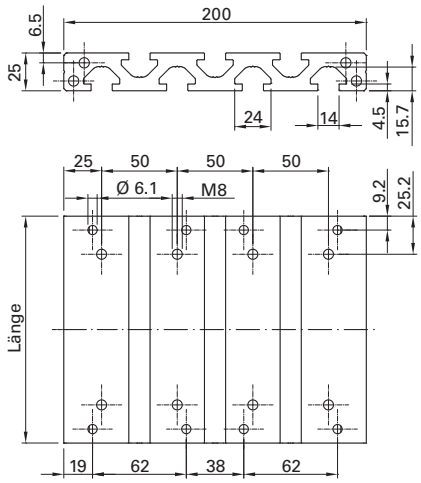

Order Code

Description	Order Code	Weight
Carriage Plate 50 Kit	LIN1501	1.150 kg
Carriage Plate 100 Kit	LIN2001	1.530 kg

LIN5191 Limit Stop

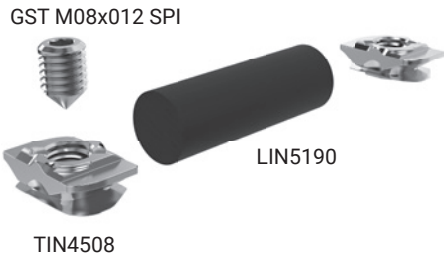

Application
Mechanical end stop, prevents pulley damage

Technical Data/Scope of Delivery
Material: galvanized steel, rubber

Used in combination with LIN3221 timing belt clamp.

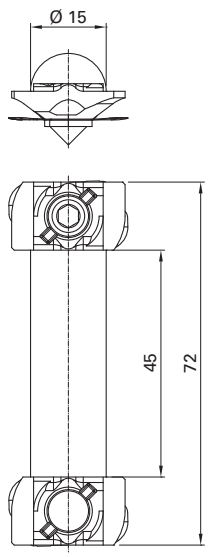

Order Code

Description	Scope of Delivery			Order Code	Weight
	LIN5190	TIN4508	GST M08x012 SPI		
Limit Stop Kit	1	2	1	LIN5191	0.036 kg

Drawing dimensions in mm

LIN8201 Proximity Switch Bracket

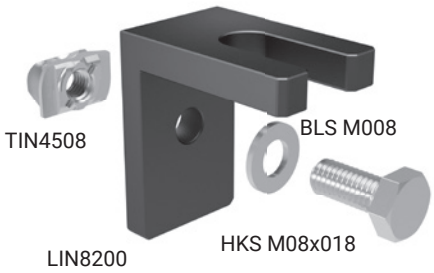

Application
Used for mounting proximity switch; the idler is the switching surface.

Technical Data
Material: black anodized aluminum, galvanized steel

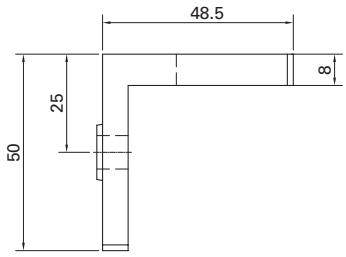

Application

Bracket and proximity switch

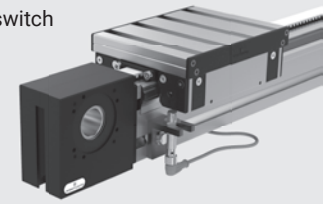

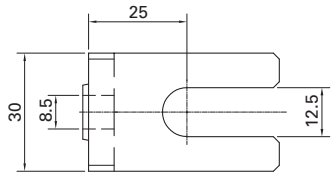

Order Code

Description	Scope of Delivery				Order Code	Weight
	LIN8200	TIN4508	HKS M08x018	BLS M008		
Proximity Switch Bracket Kit	1	1	1	1	LIN8201	0.175 kg

LIN8310 Proximity Switch

Application
Inductive proximity switch for monitoring the travel limit mounted with Proximity Switch Bracket LIN8201

Technical Data
Switching distance: 4 mm, 24V DC, PNP N/O contact, outer thread M12x1
Material: galvanized steel

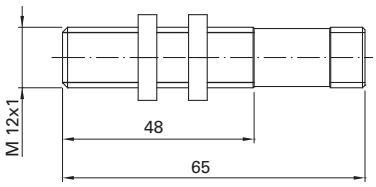

Order Code

Description	Order Code	Weight
Proximity Switch, M12x1	LIN8310	0.185 kg

LIN8312 Angle Plug With Cable

Application
Used with Proximity Switch LIN8310 to monitor travel limit

Technical Data
Cable length: 5 m
Head A connection type: socket, M12 4-pin, angled with LED
Head B connection type: loose cable end

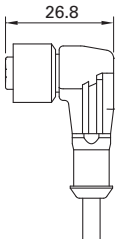

Order Code

Description	Order Code	Weight
Angle Plug with Cable, 5 m	LIN 8312	0.020 kg

LIN5241 Motor Flange

Application
To attach motor to Timing Belt Pulley

Technical Data
Material: clear anodized aluminum, galvanized steel

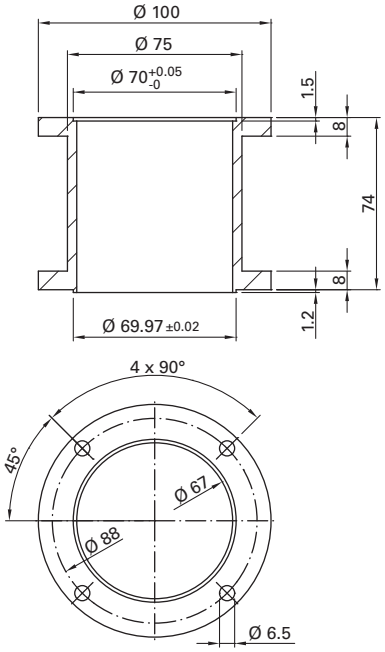

Assembly

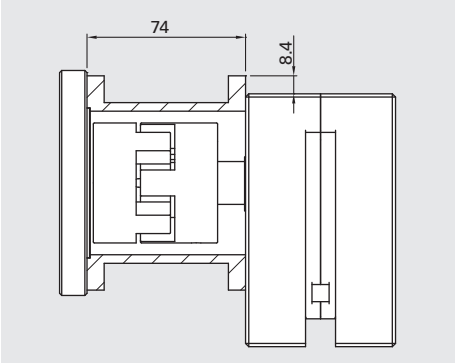

Order Code

Description	Scope of Delivery LIN5240	IBS M06x20	BLS M006	Order Code	Weight
Motor Flange Kit	1	8	8	LIN5241	0.390 kg

LIN523_ Coupling

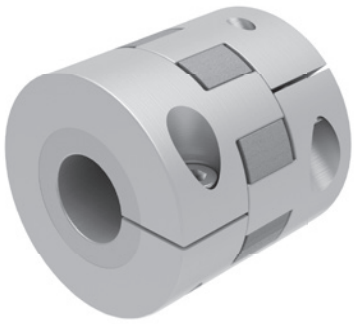

Application
To connect motor to drive shaft

Technical Data
Material: cast aluminum

Transferable torque: 60 Nm
Tightening torque: 15 Nm

Scope of Delivery
LIN5236:
2 Coupling Halves with Ø 20
1 Coupling Star

LIN5237:
1 Coupling Half, Ø 10 pre-drilled
1 Coupling Half with Ø 20
1 Coupling Star

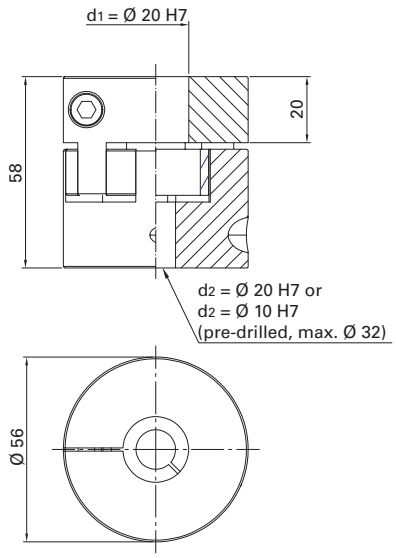

Order Code

Description	Order Code	Weight
Coupling d1 = d2 = 20 mm	LIN5236	0.360 kg
Coupling d1 = 20 mm, d2 = 10 mm, pre-drilled	LIN5237	0.360 kg

Drawing dimensions in mm

LIN52__ Driveshaft/Encoder Shaft

LIN5253

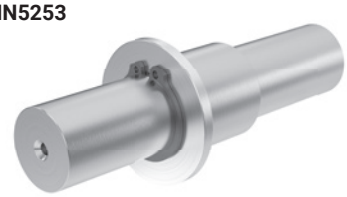

LIN5255

LIN5248

Application
To connect Coupling to Timing Belt Pulley

Technical Data
Material: stainless steel

Other diameters and lengths possible upon request.

LIN5253

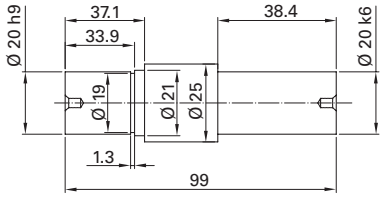

LIN5255

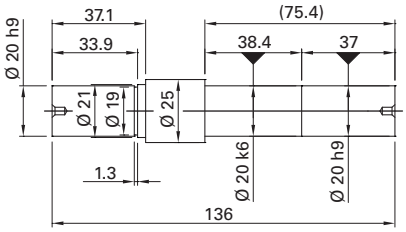

LIN5248

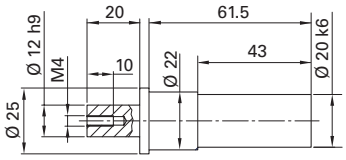

Dimensions

LIN5253

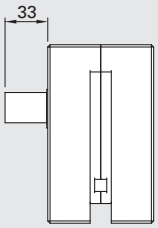

LIN5255

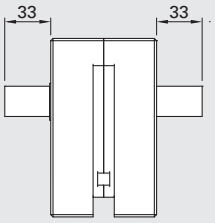

LIN5248

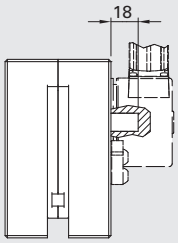

Order Code

	Scope of Delivery					Order Code	
Description	LIN5252	LIN5254	LIN5248	BLS M020	SIR 020x1.2		Weight
Single Driveshaft Kit	1	-	-	1	1	LIN5253	0.300 kg
Double Driveshaft Kit	-	1	-	1	1	LIN5255	0.400 kg
Encoder Shaft	-	-	1	-	-	LIN5248	0.190 kg

Drawing dimensions in mm

LIN5246 Expanding Coupling

Application
To connect motor or drive shaft (diameter = 20 mm) with Timing Belt Pulley

Technical Data
Material: tempered steel

Transmittable torque: 60 Nm
Tightening torque per screw: 2 Nm
Shaft tolerance: k6

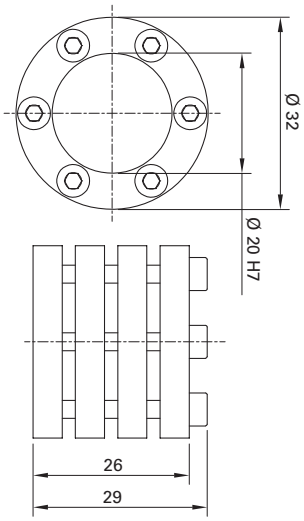

Order Code

Description	Order Code	Weight
Expanding Coupling	LIN5246	0.070 kg

LIN750_ Encoder

Application
For fitting to C8T timing belt pulley or LIN timing belt pulley

Technical Data
Material: aluminum housing
Speed: max 4000 rpm
Increments: 2000 increments/rev.
Power requirement: 60 mA (10 VDC)
30 mA (24 VDC)
Supply voltage: 10 to 30 VDC
IP rating: IP64
Output: push/pull

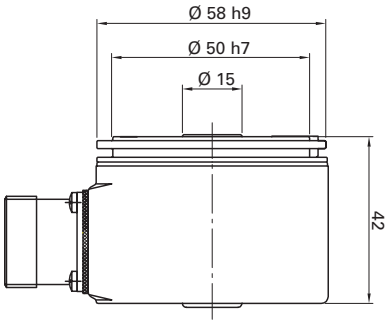

Assembly

Scope of Delivery
Encoder Kit LIN7501
1 Encoder LIN7500
including round connector
1 Encoder Shaft LIN5248
1 Expanding Coupling LIN5246
1 Torque Arm
2 Screws IBS M06x016 NIKO
1 Clamping Pin SPS 4x12

Encoder LIN7500
1 Encoder LIN7500
including round connector

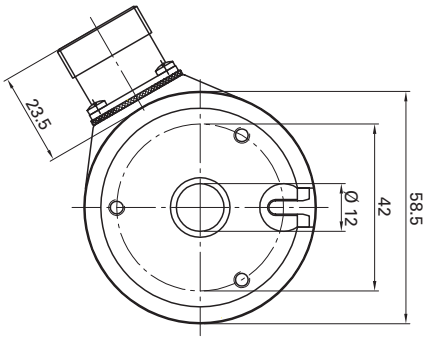

Order Code

Description	Order Code	Weight
Encoder Kit for Linear Motion Unit	LIN7501	0.660 kg
Encoder including round connector	LIN7500	0.335 kg

Drawing dimensions in mm

COL52_0 Connection Shaft With Couplings

Application
Shaft for connecting 2 belt conveyors or two linear motion units.

Technical Data
Material: aluminum, elastomer star

COL5220 / COL5230
M nom. 12 Nm
M max. 25 Nm
Tightening torque: 4 Nm (COL5220)
Tightening torque: 13 Nm (COL5230)

COL5240 / COL5250
M nom. 60 Nm
M max. 120 Nm
Tightening torque: 15 Nm (COL5240)
Tightening torque: 32 Nm (COL5250)

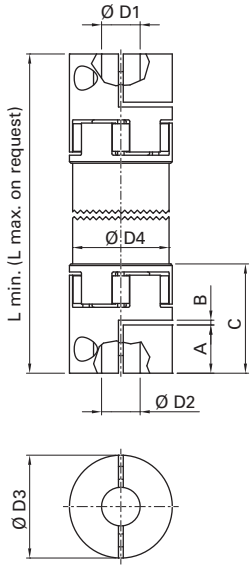

Dimensions

	D1	D2	D3	D4	A	B	C	L min.	E	F	G
COL5220 (C4T)	12	12	32	30	15	1.5	34	99	38.5	77	10
COL5230 (C4T - US Version)	12	12	46	35	17.5	0.8	49.8	142	38.5	77	10
COL5240 (C8T)	20	20	56	60	30	2	63	177	47.5	95	10
COL5250 (C8T - US Version)	20	20	73	60	23	1	63.5	196	54.5	109	17
COL5240 (LIL)	20	20	56	60	30	2	63	177	38	76	3
COL5250 (LIL - US Version)	20	20	73	60	23	1	63.5	196	45	90	10

COL5220 / COL5230 (C4T)

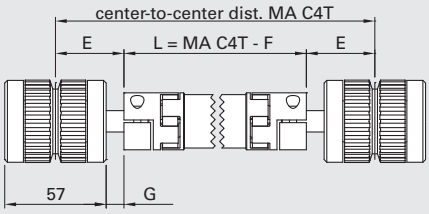

COL5240 / COL5250 (C8T)

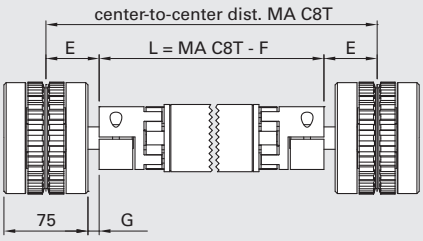

COL5240 / COL5250 (LIL)

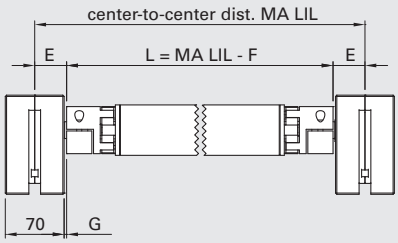

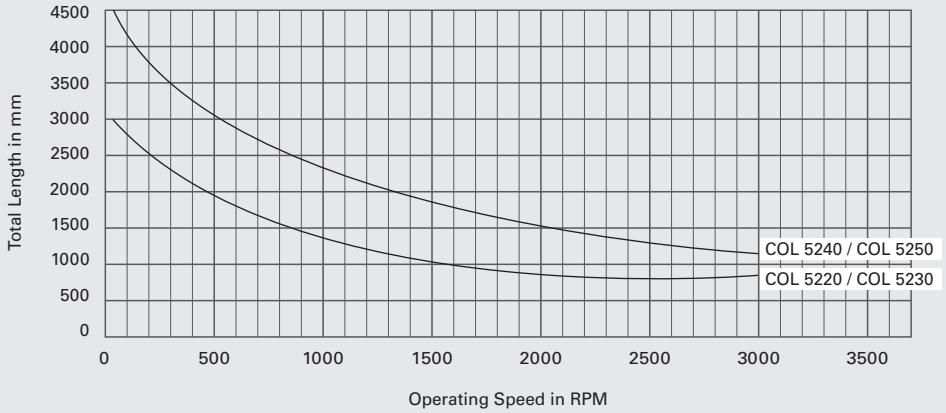

Order Code

Description	Order Code[1]	
Connection Shaft with Couplings VWZ-30/d = 12 mm	COL5220SNN	
Connection Shaft With Couplings EDC25 / d = 12 mm	COL5230SNN	(US Version)
Connection Shaft With Couplings VWZ-60 / d = 20 mm	COL5240SNN	
Connection Shaft With Couplings EDC80 / d = 20 mm	COL5250SNN	(US Version)

1) Please complete the order by adding the length parameters for cut to length orders.
Drawing dimensions in mm

CAL4012 Cover Extrusion For PIL 4012

Application
Cable duct cover for the extrusion PIL 4012

Technical Data
Material: ABS, gray RAL 7004
Stock length: 3000 mm
Temperature range: -30° to 95°

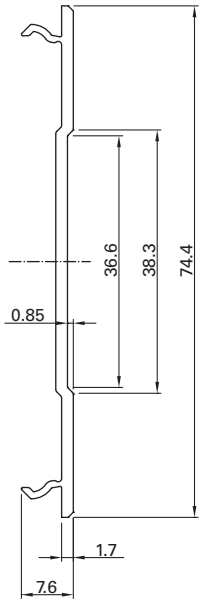

Order Code

Description	Order Code[1]	Weight/Meter
Cover Extrusion for PIL4012, cut to length	CAL4012SNN	0.145 kg
Cover Extrusion for PIL4012, stock length 3050 mm	CAL4012NNN	0.145 kg

1) Please complete the order by adding the length parameters for cut to length orders.
Drawing dimensions in mm

CAP____ End Cap

Application
Used for covering the ends of extrusions
- Self-centering
- Retained through expanding anchor
- Reusable

Technical Data
Material: black ABS V0 composite

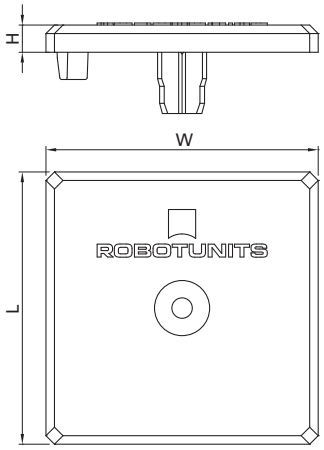

Order Code

Description	Dimension L	Dimension W	Dimension H	Scope of Delivery CAP	Scope of Delivery BKS 4x13	Order Code	Weight
End Cap 16x40 Kit	16	40	5	1	2	CAP1641	0.002 kg
End Cap 40x40 Kit	40	40	4	1	1	CAP4041	0.005 kg
End Cap 40x80 Kit	40	80	4	1	2	CAP4081	0.009 kg
End Cap 40x120 Kit	40	120	4	1	3	CAP4013	0.019 kg
End Cap 80x80 Kit (2 x CAP 4081)	80	80	4	2	4	CAP8081	0.018 kg
End Cap 50x50 Kit	50	50	5	1	1	CAP5051	0.010 kg
End Cap 50x100 Kit	50	100	5	1	2	CAP5011	0.019 kg
End Cap 50x200 Kit (2 x CAP 5011)	50	200	5	2	4	CAP5021	0.038 kg
End Cap 100x100 Kit (2 x CAP 5011)	100	100	5	2	4	CAP1011	0.038 kg
End Cap 100x200 Kit (4 x CAP 5011)	100	200	5	4	8	CAP1021	0.076 kg
End Cap 25x200 Kit	25	200	5	1	4	CAP2521	0.022 kg

PIN4530 Cable Block

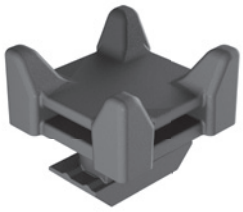

Application
To secure cables, hoses, and lines to extrusions using cable ties in x/y direction from the T-slot

Technical Data
Material: PA composite fiberglass-reinforced, black

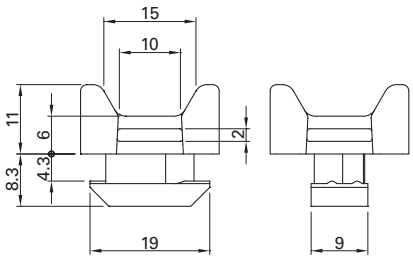

Assembly

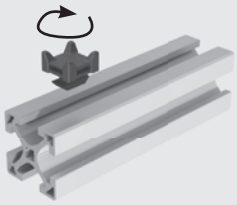

Rotate cable block into T-slot into without tools

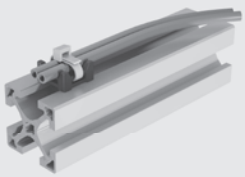

Secure cables or wires with a cable tie

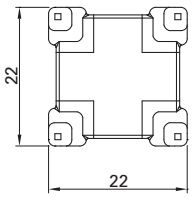

Order Code

Description	Order Code	Weight
Cable Block	PIN4530	0.005 kg
Cable Block, pack of 50 pcs.	PIN4530PAC	0.240 kg

PIN4590 Plastic Hook

Application
For hanging items and objects along the T-slot

Technical Data
Material: PA composite fiberglass-reinforced, black

Load capacity: max. 10 kg

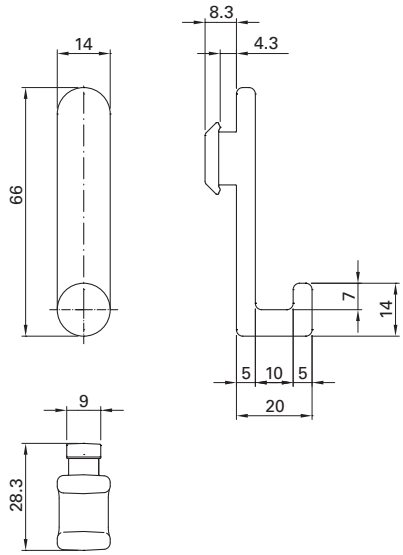

Function

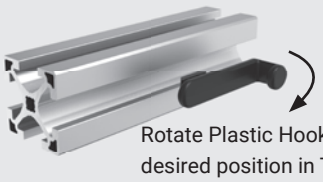

Rotate Plastic Hooks to the desired position in T-slot without tools

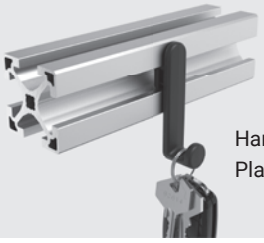

Hang object on the Plastic Hook

Order Code

Description	Order Code	Weight
Plastic Hook	PIN4590	0.010 kg

TIN4501 Fine-Tuning And Fixing Element

Base Part with GST M08x021 SPI

GST M08x040

Spring

Application
Used for securing and fine tuning component positions. Post insertion possible, can be used with 40 mm and 50 mm series extrusions, e.g.:

- Conveyor Belt Tracking
- Fine adjustment of cross bars
- Securing connections

Technical Data
Material: galvanized steel

TIN4501 can also be used for electrical grounding.

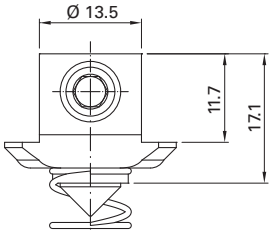

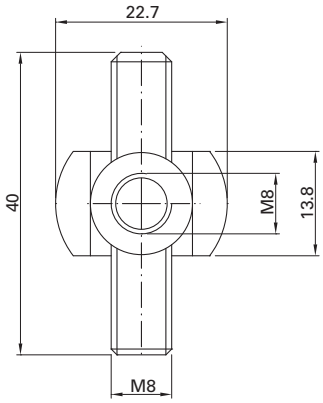

Order Code

Description	Scope of Delivery: Base Part	Spring	GST M08x012 SPI	GST M08x040	Order Code	Weight
Fine-Tuning and Fixing Element	1	1	1	-	TIN4500	0.016 kg
Fine-Tuning and Fixing Element Kit	1	1	1	1	TIN4501	0.028 kg

LIN404_ / LIN505_ Linear Slider

Linear Slider 40

Linear Slider 40 with clamping lever

Application
Manual device for clamping / adjusting a slide on the extrusion

Technical Data
Material: clear anodized aluminum
POM-C black, ABS V0 black, galvanized steel

Scope of Delivery
Completely pre-assembled, consisting of:

- 1 Extrusion 25 x 200 PIL 2520
- 2 Sliding guide blocks 40 or 50
- 2 End Caps CAP2521
- 4 Cylinder screws with hexagon socket IBSM08X035 or 040
- 4 Drop-in Nuts TIN4508
- 4 Set screws with socket head and tip GST-M10X020SPI
- 1 Clamping lever (for LIN4041/5051)
- 1 Washer BLS M008 (for LIN4041/5051)
- 1 T-Nut TIN6008 (for LIN4041/5051)

The Linear Slider is not suitable for cantilevered loads and is NOT a replacement for a Linear Motion Unit.

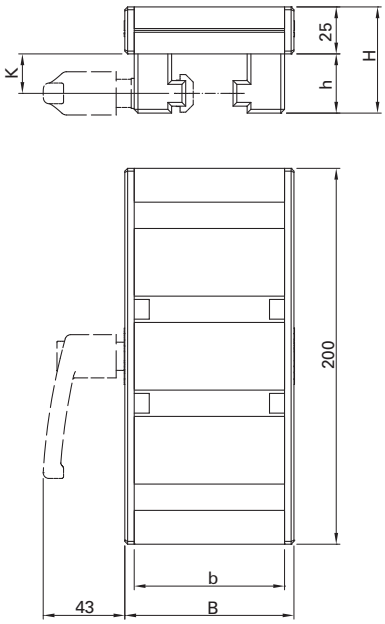

Assembly

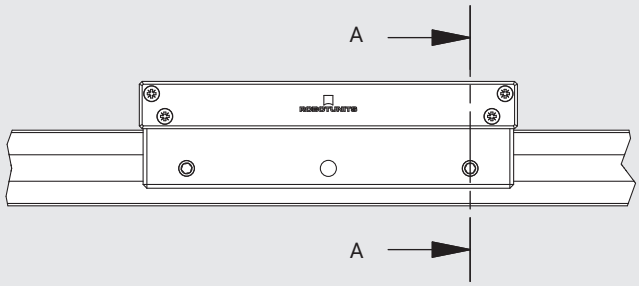

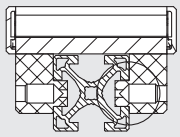

Adjusting the guide play X via a set screw

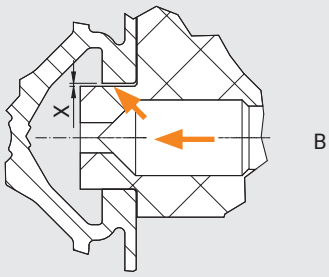

Order Code

Description	b	B	h	H	K	Order Code	Weight
Linear Slider 40	80	90	31.5	56.5	21	LIN4040	1.170 kg
Linear Slider 40 with Clamping Lever	80	90	31.5	56.5	21	LIN4041	1.245 kg
Linear Slider 50	90	100	36.5	61.5	26	LIN5050	1.245 kg
Linear Slider 50 with Clamping Lever	90	100	36.5	61.5	26	LIN5051	1.400 kg

Drawing dimensions in mm

CAL45__ Cover/Insert Extrusion

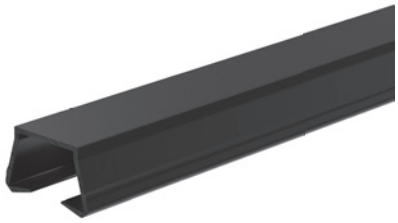

Application
For covering T-slots and fastening
4 - 8 mm thick panels

- Dust protection
- Splash guard
- Cable routing
- Cover extrusion for LED lighting with CAL4508

Technical Data
Material: impact-resistant PVC with soft lip
Stock length: 2000 mm

LED lighting with CAL4508*
Max. power of the LED: 20 W/m
Light intensity 1 m below the extrusion with a luminous flux of 2000 lm/m: 850 Lux

yellow: RAL 1021
gray: RAL 7004

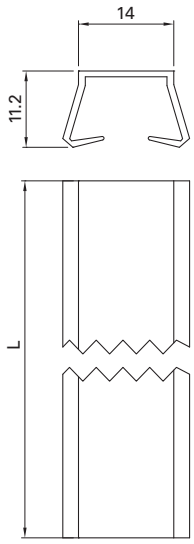

Application

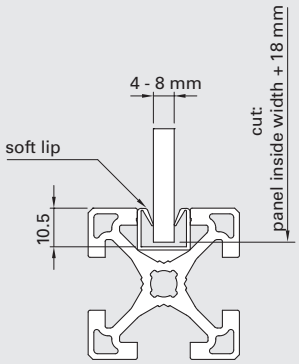

Application as insert extrusion

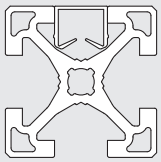

Application as a cover extrusion

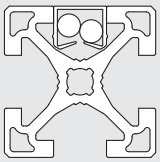

Application as a cover extrusion for cable routing

Application as a cover extrusion with LED lighting*

Order Code

Description	Order Code[1]	Weight/Meter
Cover/Insert Extrusion, black, cut to length	CAL4500SNN	0.050 kg
Cover/Insert Extrusion, black, stock length 2000 mm	CAL4500NNN	0.050 kg
Cover/Insert Extrusion, black, 160 pcs., stock length 2000 mm	CAL4500PAC	0.050 kg
Cover/Insert Extrusion, yellow, cut to length	CAL4504SNN	0.050 kg
Cover/Insert Extrusion, yellow, stock length 2000 mm	CAL4504NNN	0.050 kg
Cover/Insert Extrusion, yellow, 160 pcs., stock length 2000 mm	CAL4504PAC	0.050 kg
Cover/Insert Extrusion, gray, cut to length	CAL4510SNN	0.050 kg
Cover/Insert Extrusion, gray, stock length 2000 mm	CAL4510NNN	0.050 kg
Cover/Insert Extrusion, gray, 160 pcs., stock length 2000 mm	CAL4510PAC	0.050 kg

1) Please complete the order by adding the length parameters for cut to length orders.
Drawing dimensions in mm

CAL4540 T-Slot Sliding Rail

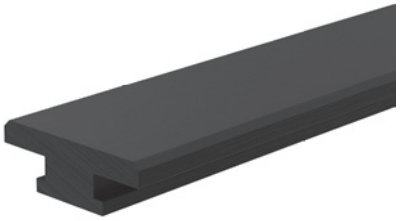

Application
Simple linear guidance in the T-slot

Technical Data
Material: PAS-PE3 composite, black
Stock length: 2000 mm
Temperature range:
-10° to 70° continuous,
90° to 100° short-term

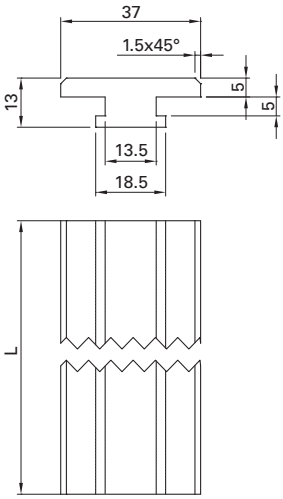

Order Code

Description	Order Code[1]	Weight/Meter
T-Slot Sliding Rail, cut to length	CAL4540SNN	0.222 kg
T-Slot Sliding Rail, stock length 2000 mm	CAL4540NNN	0.222 kg

CAL4545 Aluminum Cover Extrusion

Application
Used for covering T-slots:
- Dust protection
- Splash guard
- Cable routing

Technical Data
Material: anodized aluminum

stock length: 2050 mm
(usable length 2000 mm)

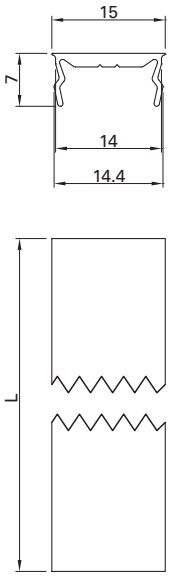

Order Code

Description	Order Code[1]	Weight/Meter
Aluminum Cover Extrusion, cut to length	CAL4545SNN	0.043 kg
Aluminum Cover Extrusion, stock length 2050 mm	CAL4545NNN	0.043 kg

1) Please complete the order by adding the length parameters for cut to length orders.
Drawing dimensions in mm

CAL4560 Anti-Slip Profile

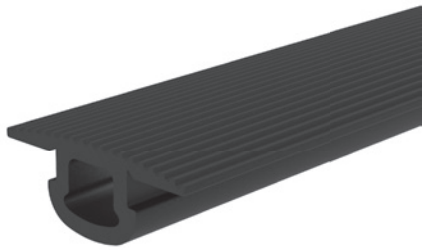

Application
Anti-slip protection for steps
(ladders, stairs, etc.)

Technical Data
Material: NBR 80 Shore A
Temperature range:
-30° to 100° continuous,
-50° to 120° short-term

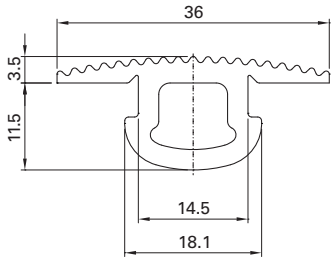

Application

Function of Anti-Slip Profile

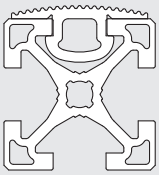

Rework

Cut away this part of the profile

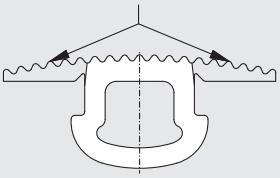

Modification for use as door gasket, bumper, etc.

Useful for many purposes!

The non-slip extrusion can also be used as a sealing extrusion or a buffer extrusion by cutting the side rubber lips.

Order Code

Description	Order Code[1]	Weight/Meter
Anti-Slip Profile, cut to length	CAL4560SNN	0.213 kg
Anti-Slip Profile, roll, length 20 meters	CAL4560PAC	0.213 kg

1) Please complete the order by adding the length parameters for cut to length orders.
Drawing dimensions in mm

CAL4565 Gasket

Application
Door gasket
- Stops/buffers (drawers, doors)
- Travel stops

Technical Data
Material: NBR 80 Shore A
Temperature range:
-30° to 100° continuous,
-50° to 120° short-term

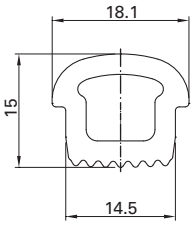

Function

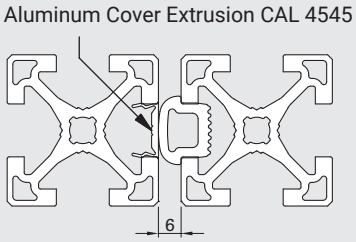

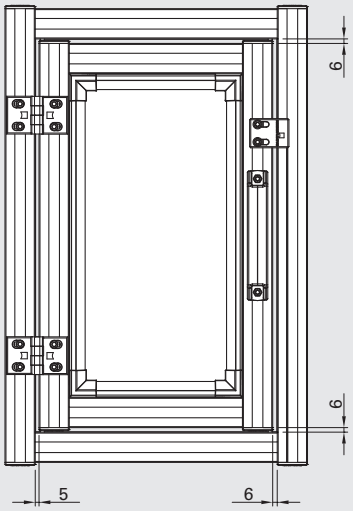

Order Code

Description	Order Code[1]	Weight/Meter
Gasket, cut to length	CAL4565SNN	0.160 kg

1) Please complete the order by adding the length parameters for cut to length orders.
Drawing dimensions in mm

BAP205_ Safety Fence Floor Bracket

Application
Floor mount of stands and safety fence panels built with 40 mm series extrusions

Technical Data
Material: steel, gray powder coating
Height adjustment - 20 / + 5 mm

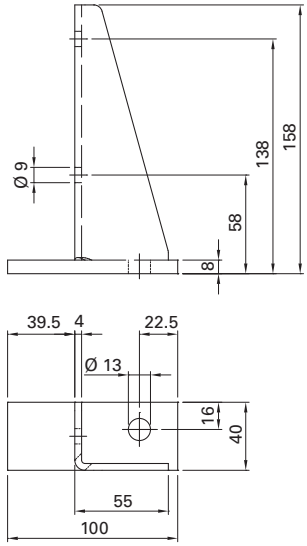

Assembly

Safety Fence Floor Bracket BAP2051

2 Safety Fence Floor Brackets BAP2051

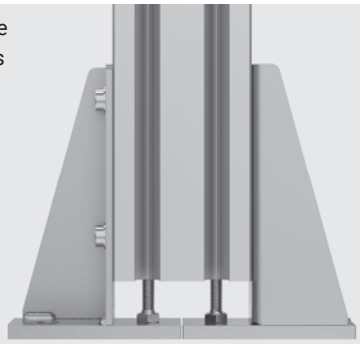

Order Code

Description	Scope of Delivery					Order Code	Weight
	BAP2050	TIN4508	IBS M08x016NIKO	HKS M08x040	BLS M008		
Safety Fence Floor Bracket	1	-	-	-	-	BAP2050	0.568 kg
Safety Fence Floor Bracket Kit	1	2	2	1	2	BAP2051	0.638 kg

BAP2900 Anchor Bolt

Application
For anchoring structures to the floor

Technical Data
Material: galvanized steel

Permitted tensile load: 6.7 kN
(concrete hardness class C20/25)
Minimum anchor depth: 60 mm

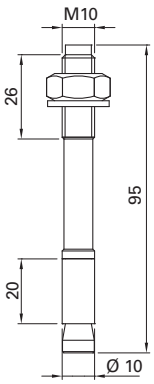

Order Code

Description	Order Code	Weight
Anchor Bolt	BAP2900	0.055 kg

BAP_0__ Base And Transport Plate

BAP4080
BAP5010

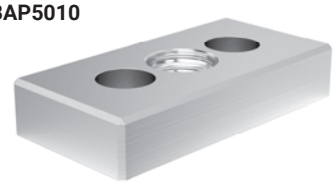

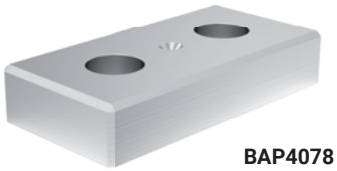

BAP4078
BAP5008

BAP8080
BAP1010

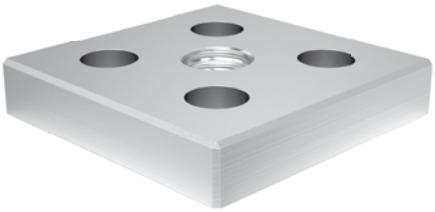

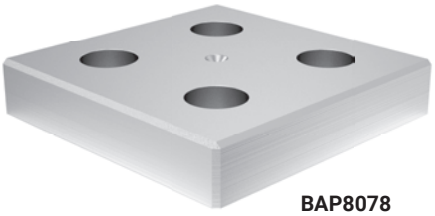

BAP8078
BAP1008

Application
Used for attaching leveling bases or other transportation devices.

Technical Data
Material: galvanized steel

Application

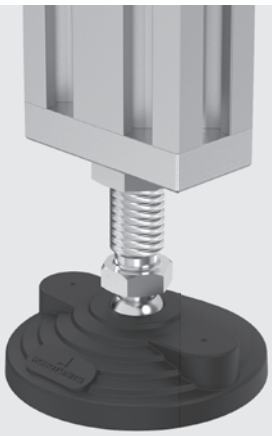

Used as leveling base

Used as transport plate

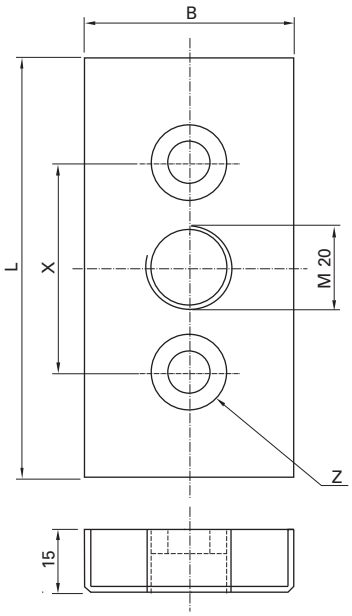

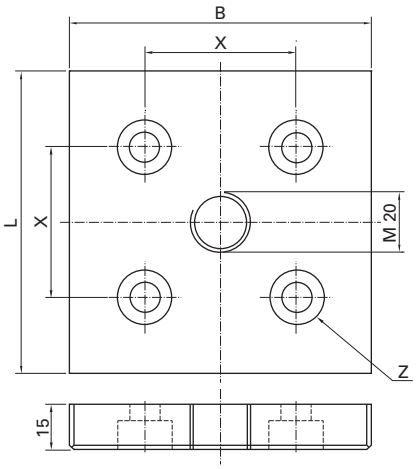

Order Code

Description	L	W	X	Z[1]	Order Code	Weight
Base and Transport Plate 40x80, without thread	80	40	40	IBS M08x020	BAP4078	0.343 kg
Base and Transport Plate 40x80, M20 thread	80	40	40	IBS M08x020	BAP4080	0.312 kg
Base and Transport Plate 80x80, without thread	80	80	40	IBS M08x020	BAP8078	0.682 kg
Base and Transport Plate 80x80, M20 thread	80	80	40	IBS M08x020	BAP8080	0.655 kg
Base and Transport Plate 50x100, without thread	100	50	50	IBS M10x030	BAP5008	0.533 kg
Base and Transport Plate 50x100, M20 thread	100	50	50	IBS M10x030	BAP5010	0.503 kg
Base and Transport Plate 100x100, without thread	100	100	50	IBS M10x030	BAP1008	1.049 kg
Base and Transport Plate 100x100, M20 thread	100	100	50	IBS M10x030	BAP1010	1.018 kg

1) Not included in the scope of delivery
Drawing dimensions in mm

BAS____ Leveling Base M8/M10

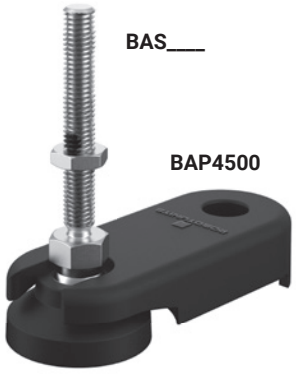

Application
Pivoting, height adjustable floor bracket for stands, frames and enclosures
- Continuous height adjustment (+/- 20 mm)
- Vibration damping
- Ball joint

Technical Data
Material: galvanized steel;
PA 6 composite; rubbe

BAS4008: max. load 350 kg
BAS5010: max. load 450 kg

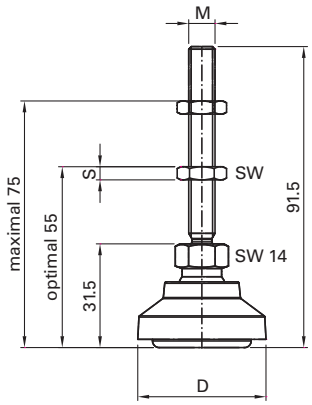

Order Code

Description	M	D	S	SW	Scope of Delivery BAS4008	BAS5010	BAP4500	Order Code	Weight
Leveling Base M8	8	39	4	13	1	-	-	BAS4008	0.062 kg
Leveling Base M8 with Mounting Plate	8	39	4	13	1	-	1	BAS4108	0.092 kg
Leveling Base M10	10	49	6	17	-	1	-	BAS5010	0.082 kg
Leveling Base M10 with Mounting Plate	10	49	6	17	-	1	1	BAS5011	0.112 kg

BAS1___ Leveling Base M20

BAS1020

Application
Pivoting, height adjustable floor bracket for stands, frames and enclosures
- Continuous height adjustment (+/- 30mm)
- Vibration damping
- Ball joint

Technical Data
BAS1020
Material: galvanized steel;
PA 6 composite; rubbe
- Pivot range +/- 20°

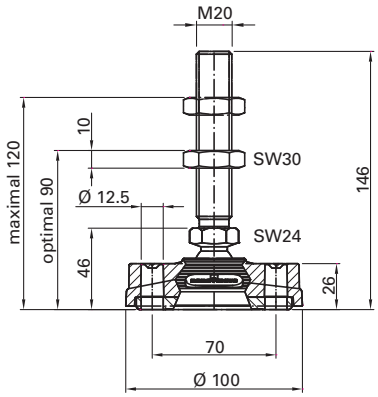

BAS1120

BAS1120
Material: galvanized steel; rubbe
- Pivot range +/- 6°

max. load 950 kg

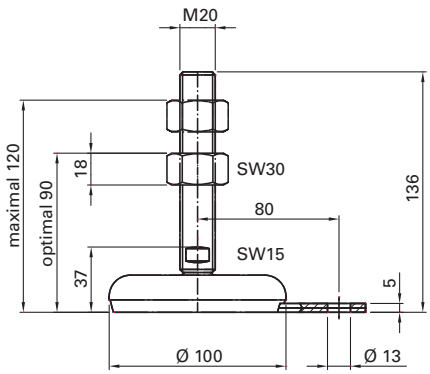

Order Code

Description	Order Code	Weight
Leveling Base M20	BAS1020	0.479 kg
Leveling Base M20 with Mounting Plate	BAS1120	0.715 kg

Drawing dimensions in mm

BAP4500 Floor Mounting Plate

Application
Fixing Leveling Base to the floor

Technical Data
Material: PA 6

Tightening torque
Anchor Bolt BAP 2900 = 12 Nm
(not included in the scope of delivery)

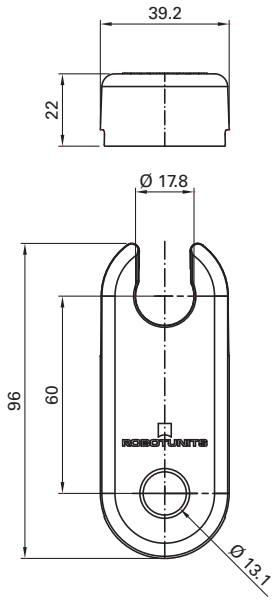

Application

BAP4108

BAP5011

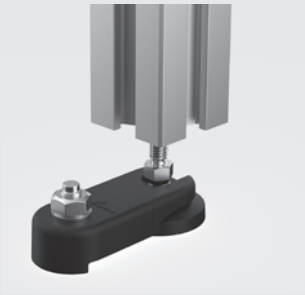

Order Code

Description	Order Code	Weight
Floor Mounting Plate	BAP4500	0.030 kg

Drawing dimensions in mm

CAS_08_ Castor With Plate

CAS0080

Application
Transport carts of all types

Technical Data
Material: galvanized steel, rubber

Safe working load: 100 kg

CAS0080

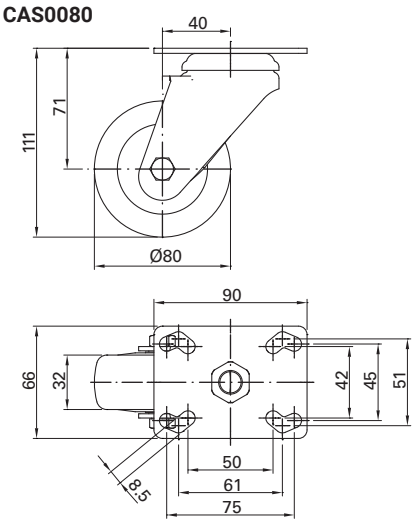

CAS0082

CAS0082

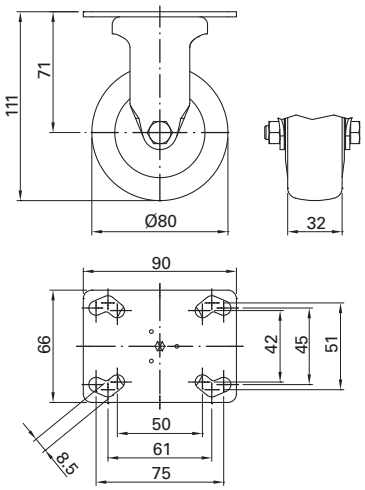

CAS1080

CAS1080

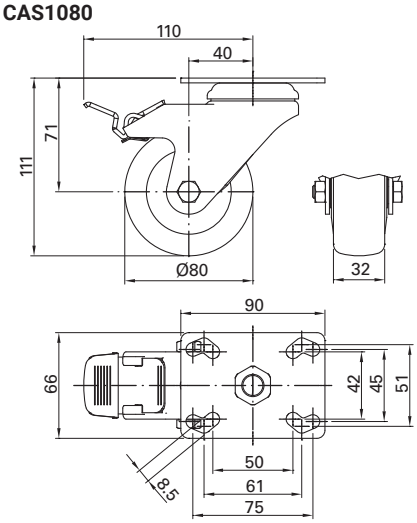

Order Code

Description	Order Code	Weight
Swivel Castor with Plate, 80 mm	CAS0080	0.604 kg
Rigid Castor with Plate, 80 mm	CAS0082	0.462 kg
Swivel Castor with Plate and Brake, 80 mm	CAS1080	0.716 kg

CAS_08_ Castor With Bolt Hole Fitting

CAS2080

Application
Transport carts of all types

Technical Data
Material: galvanized steel, rubber

Fastening material for end-to-end assembly on the extrusion (not included in the scope of delivery);
PIL 4040: BLSM008S04, IBSM08x035
PIL 5050: BLSM010, IBSM10x040

Safe working load: 100 kg

CAS2080

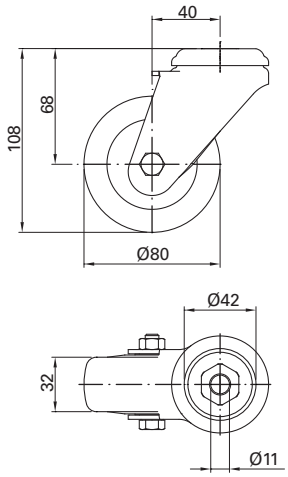

CAS2082

CAS2082

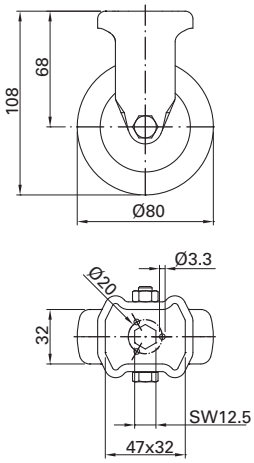

CAS3080

CAS3080

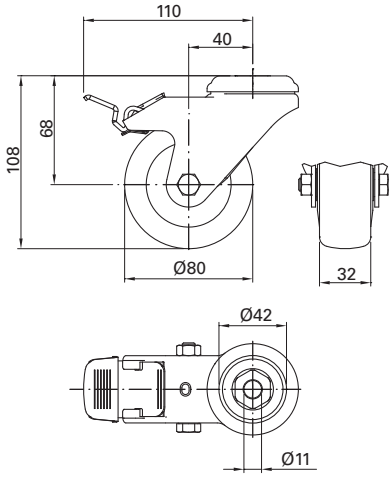

Order Code

Description	Order Code	Weight
Swivel Castor with Bolt Hole Fitting, 80 mm	CAS2080	0.489 kg
Rigid Castor with Bolt Hole Fitting, 80 mm	CAS2082	0.317 kg
Swivel Castor with Bolt Hole Fitting and Brake, 80 mm	CAS3080	0.597 kg

1006__ Allen Key For Hex Socket Head Cap Screws

Application
Allen Key with ball head for manual tightening the hex socket head cap screws for 40 and 50 mm series fasteners.
A plastic sleeve prevents damage to the edges of the T-slot.

Technical Data
Material: high-quality, plastic-coated tool steel

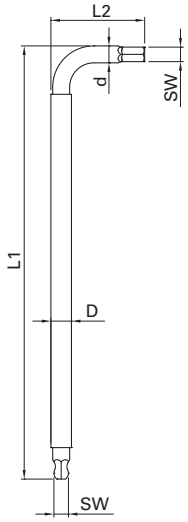

Application

Allen Key For Hex Socket Head Cap Screws, size 5 mm, for 40 mm series fasteners (FAS4041, FAS4081)

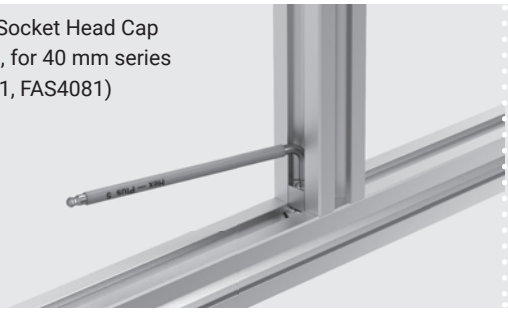

Allen Key For Hex Socket Head Cap Screws, size 6mm, for 50 mm series fasteners and corner brackets (e.g. FAS5051, GUS4501, etc.)

Order Code

Description	SW	d	D	L1	L2	Order Code	Weight
Allen Key for Hex Socket Head Cap Screws, 5 mm	5	6	7.5	160	35	100659	0.040 kg
Allen Key for Hex Socket Head Cap Screws, 6 mm	6	7	8.5	180	40	100660	0.060 kg

Drawing dimensions in mm

10069_ 1/4" Hex Bit With Ball End

Application
1/4" Hex Bit with ball head for impact driver to tighten the hex socket head cap screws for 40 and 50 mm series fasteners.
Cylindrical end prevents damage to the edges of the T-slot.

Technical Data
Material: high-quality, tool steel

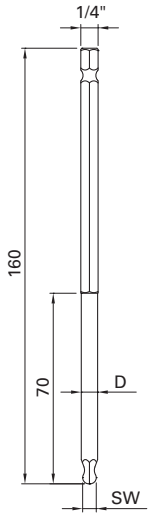

Application

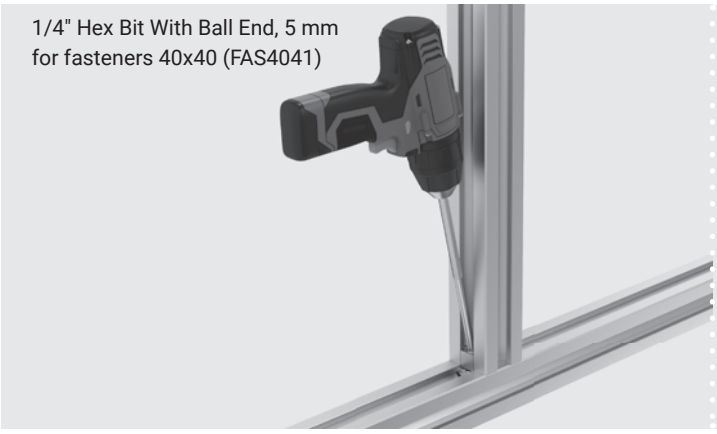

Order Code

Description	SW	D	Order Code	Weight
1/4" Hex Bit with Ball End, 5x160	5	6	100691	0.040 kg
1/4" Hex Bit with Ball End, 6x160	6	6.7	100692	0.060 kg

Drawing dimensions in mm